CZ NÁVOD K POUŽITÍ PÁSOVÁ PILA

EN OPERATING INSTRUCTIONS WOOD BANDSAW

HBS 230HQ

PÁSOVÁ PILA / WOOD BANDSAW

Před uvedením do provozu si přečtěte tento návod na obsluhu a bezpečnostní pokyny!

Read the operation manual carefully before first use!

Technické změny a chyby tisku vyhrazeny!

Technical data subject to changes, errors excepted!

Vydání/Edition: 2015 – Revision 01 – GBR - CZ/EN

HOLZMANN-MASCHINEN GmbH
Marktplatz 4 | 4170 Haslach | AUSTRIA
Gewerbepark 8 | 4707 Schlüsslberg | AUSTRIA
Tel: +43 - 7289 / 71562-0 | Fax: +43 - 7289 / 71562-4
Tel: +43 - 7248 / 61116-0 | Fax: +43 - 7248 / 61116-6
info@holzmann-maschinen.at , www.holzmann-maschinen.at

2 SESTAVENÍ PILY / INSTALLATION

1. Montáž spodních desek.

- Spodní díl stroje položte na vhodnou podložku. (Fig. A)
- Našroubujte spodní desku s pomocí šroubů a podložek M5x10.
- Stroj opět postavte kolmo na podlahu.

1.1 Attach the foot to band saw

- *Put down the machine on a timber like at the picture.*
- *Attach foot A & B to band saw by using pan head screw and washer.*
- *Place the band saw on a workbench for next assembly.*

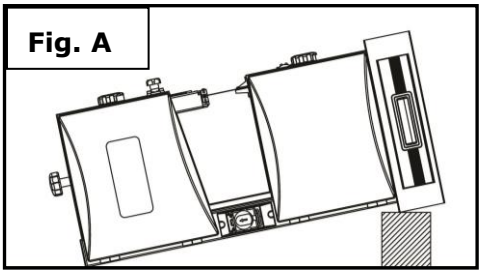

Fig. A

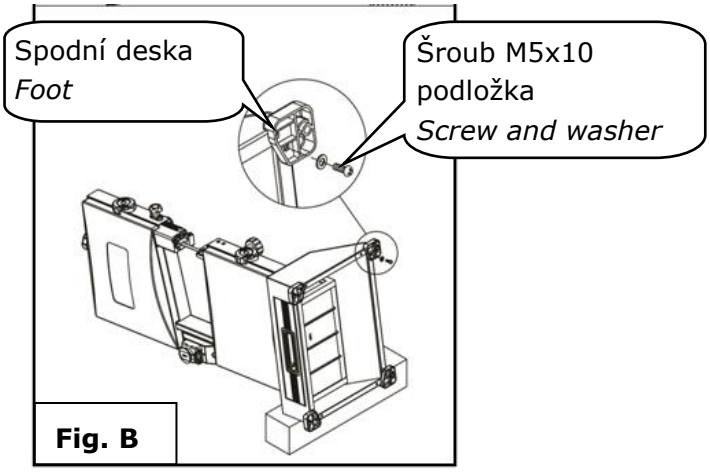

Fig. B

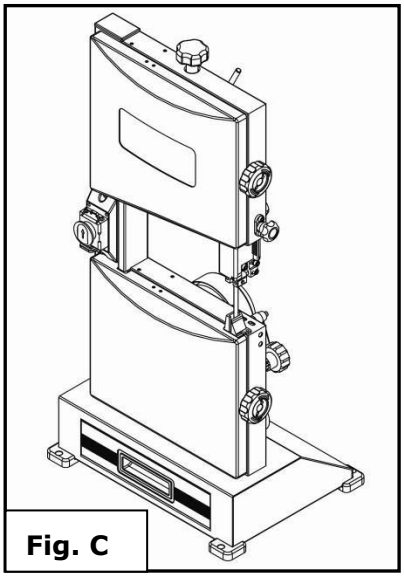

Fig. C

2. Upevněte zvedací rukojeť na horní stranu stroje s pomocí dodaných šroubů.

2.1 Fix the lifting handle on top of band saw.

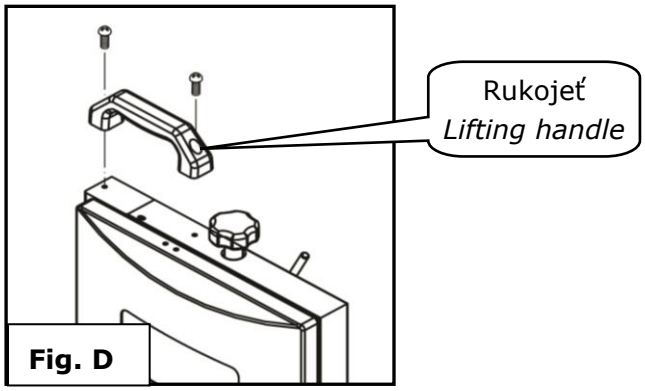

Fig. D

3. Montáž stolu

Uvolněte křídlatý šroub a vysuňte matku z drážky stolu.
Zasuňte stůl na stroj výřezem pro pilový pás podle obrázku (Fig F).

3.1 Mounting table assembly

- *Remove the D-nut, washers, and wing screw on the saw table.*
- *Slide the saw table past the blade and through the slot moving to the frame, pulling the angle adjustment knob away from the saw frame, Align the teeth on the saw table bracket into the teeth on the angle adjustment knob. Release the knob.*

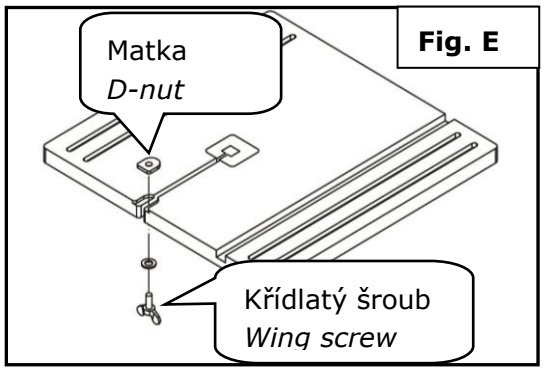

Fig. E

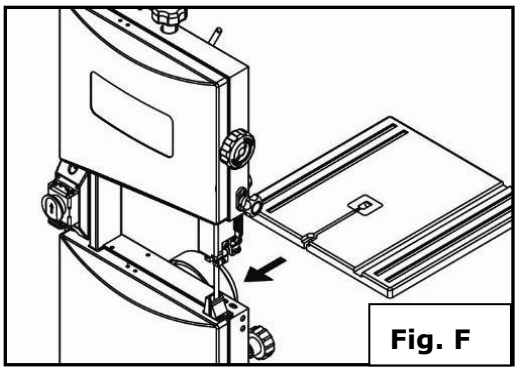
Fig. F

- Našroubujte ozubenou konzoli náklonu na spodní stranu stroje. Zuby růžice musí zapadnout do zubů na konzoli.
- Zašroubujte do konzole zajišťovací kličku.
- Stůl kličkou zajistěte.
- Našroubujte zpět matku do drážky stolu a zajistěte ji křídlatým šroubem.

- *Fit the pins on the frame into the slots of the saw table bracket.*
- *Assemble the flat washer and table lock handle. Tighten the saw table to the saw frame by turning the table lock lever clockwise.*
- *Attach the D-nut, washers, and wing screw to the saw table.*

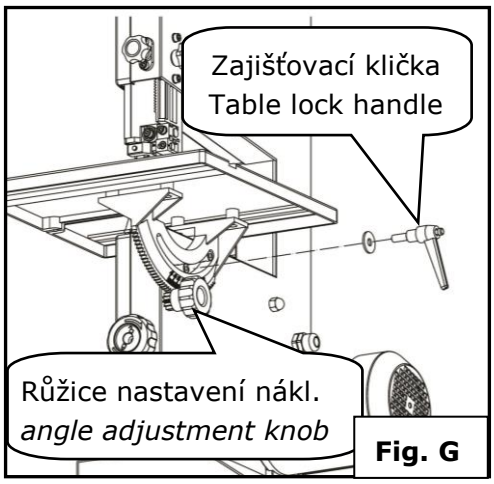

Fig. G

Našroubujte na rám hák držáku s pomocí matky M6.

- Na hák zavěste podavač.

- *Secure the hook with M6 hex nut to the frame.*
- *Place push stick onto the hook*

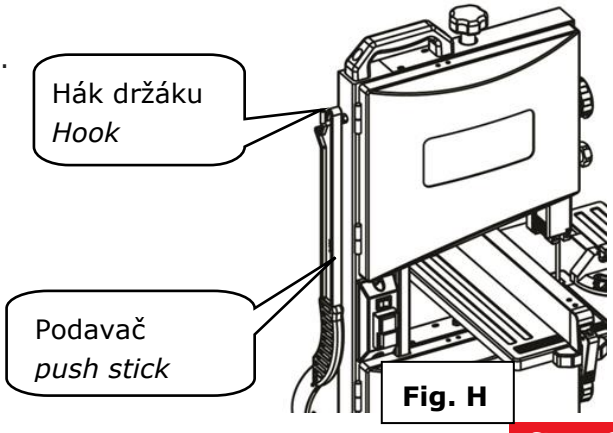

Fig. H

Pilu je možné s pomocí čtyř šroubů připevnit k pracovnímu stolu.

- Na stůl namontujte úhlové a podélné pravítko.

Fix the band saw to a workbench by using four thread forming screws (not provide).

- *Place the fence and miter gauge onto the table.*

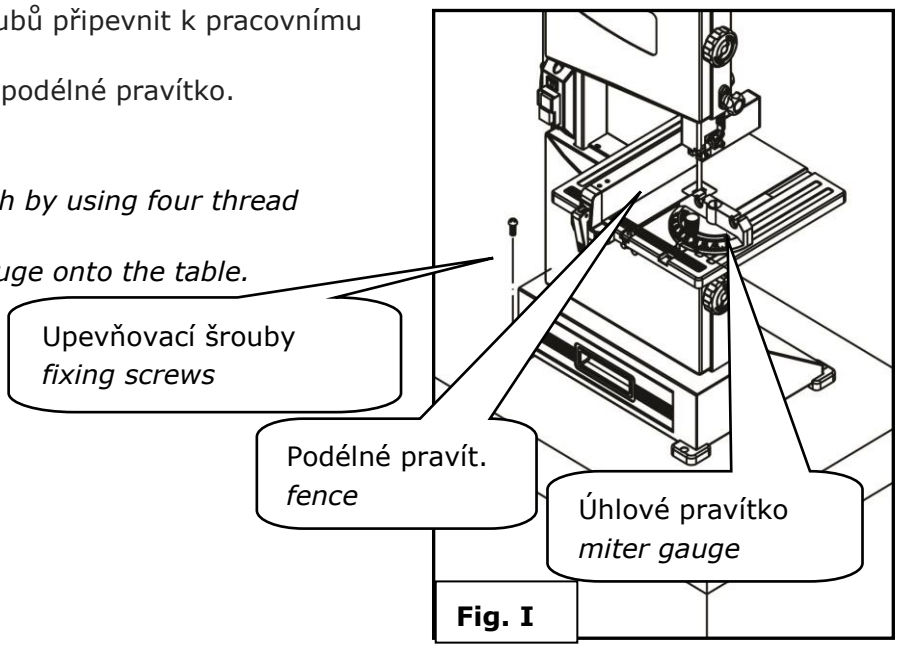

Fig. I

3 BEZPEČNOSTNÍ SYMBOLY / SAFETY SIGNS

CZ ***BEZPEČNOSTNÍ SYMBOLY VÝZNAM***

EN ***SAFETY SIGNS DEFINITION OF SYMBOLS***

CZ **POZOR!** *Dbejte bezpečnostních symbolů! Nedodržování předpisů a pokynů může vést k těžkým poraněním osob nebo dokonce smrtelným úrazům.*

EN **ATTENTION!** Ignoring the safety signs and warnings applied on the machine as well as ignoring the security and operating instructions can cause serious injuries and even lead to death.

CZ **PŘEČTĚTE SI TENTO NÁVOD !** *Přečtěte si řádně návod na obsluhu a údržbu Vašeho stroje a dobře se seznamte s ovládacími prvky stroje, aby byl tento řádně obsluhován a předešlo se ke škodám na stroji a zraněním osob.*

EN **READ THE MANUAL!** Read the user and maintenance manual carefully and get familiar with the controls n order to use the machine correctly and to avoid injuries and machine defects.

CZ Používejte ochranné prostředky!

EN Wear protective equipment

CZ Stroj před úkonem údržby nebo před přestávkou v práci vypněte a odpojte ze sítě!

EN Stop and pull out the power plug before any break and engine maintenance!

CZ Obsluha pouze vyškoleným personálem!

EN Only trained staff!

CZ Zákaz obsluhy se šperky!

EN Operation with jewelry forbidden!

CZ Zákaz obsluhy s kravatou!

EN Operation with tie forbidden!

CZ Zákaz obsluhy s rozpuštěnými vlasy!

EN Operation with long hair forbidden!

CZ Pozor na řezná poranění!

EN Warning about cut injuries!

CZ **CE-shodné!** – ***Tento produkt odpovídá směrnicím EU.***

EN **CE-Conformal!** - ***This product complies with the EC-directives.***

12 PREFACE

Dear Customer!

This manual contains information and important instructions for the installation and correct use of the wood bandsaw HBS 230HQ.
Following the usual commercial name of the device (see cover) is substituted in this manual with the name "machine".
This manual is part of the product and shall not be stored separately from the product. Save it for later reference and if you let other people use the product, add this instruction manual to the product.

Please read and obey the security instructions!
Before first use read this manual carefully. It eases the correct use of the product and prevents misunderstanding and damages of product and the user's health.

Due to constant advancements in product design construction pictures and content may diverse slightly. However, if you discover any errors, inform us please.
Technical specifications are subject to changes!

Please check the product contents immediately after receipt for any eventual transport damage or missing parts.

Claims from transport damage or missing parts must be placed immediately after initial product receipt and unpacking before putting the product into operation.

Please understand that later claims cannot be accepted anymore.

Copyright

© 2015
This document is protected by international copyright law. Any unauthorized duplication, translation or use of pictures, illustrations or text of this manual will be pursued by law.
Court of jurisdiction is the Landesgericht Linz or the competent court for 4170 Haslach, Austria!

CUSTOMER SERVICE CONTACT

HOLZMANN MASCHINEN GmbH

A-4170 Haslach, Marktplatz 4
Tel 0043 7289 71562 - 0
Fax 0043 7289 71562 – 4
info@holzmann-maschinen.at

13 TECHNIC

13.1 Main components and Controls

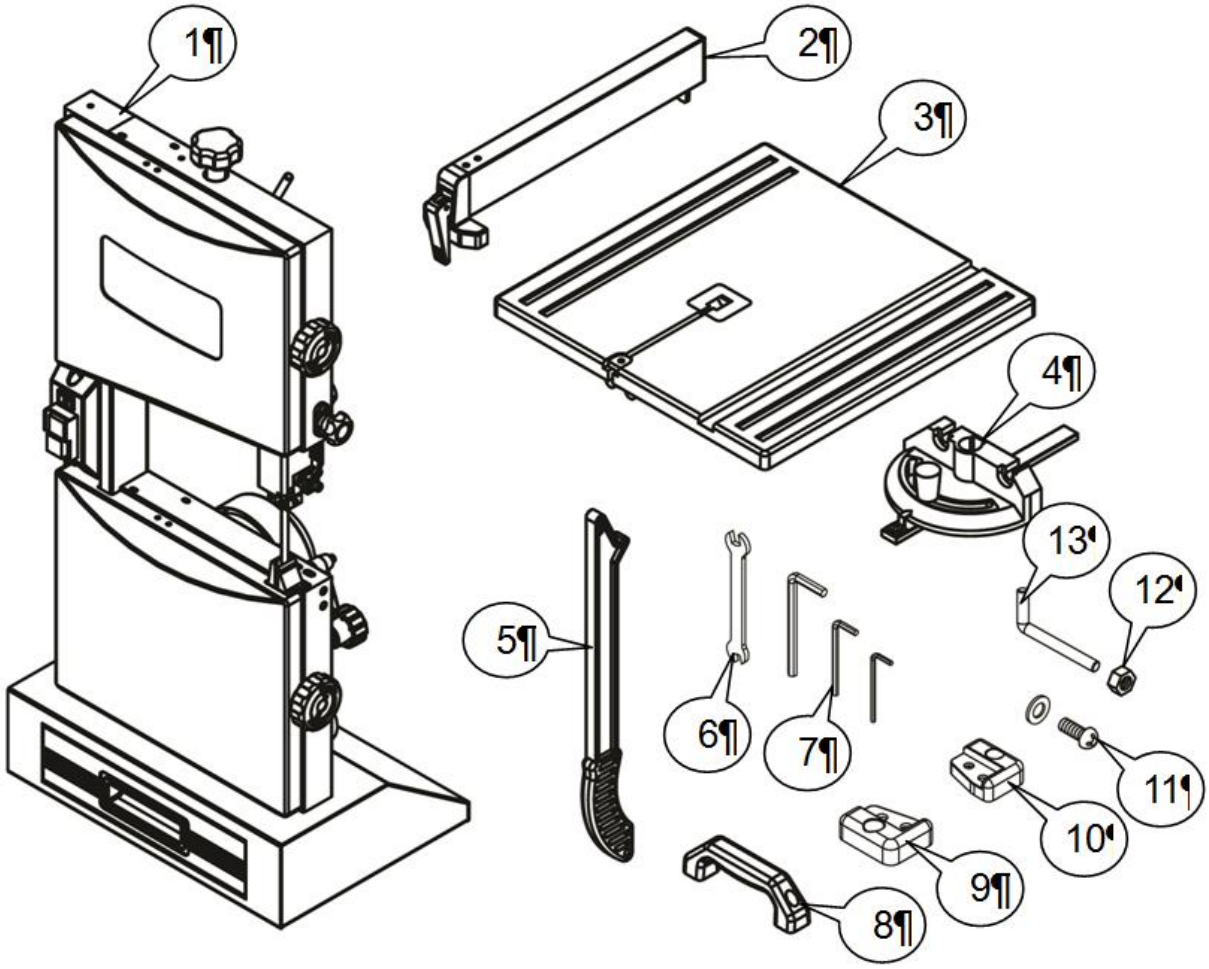

Nr.	Specifikation	Qty.	Nr.	Specifikation	Qty.
1	Band saw	1	8	Lifting Handle	1
2	Fence	1	9	Foot A	2
3	Table assembly	1	10	Foot B	2
4	Miter gauge	1	11	Pan head screw and washer	8
5	Push stick	2	12	M6 hex nut	1
6	Wrench 8 - 10mm	4	13	Hook	1
7	Hex wrench 2,5 - 4 - 6 mm	3			

13.2 Technical Details

Specification	HBS 230HQ
Motor power	300 W
Voltage	230V / 50Hz
Cutting-capacity	90 mm
Throad Width	228 mm
Cutting-speed	635 m/min
Table size	300 x 300 mm
Blade size	1575 x 3 – 10 mm
Pivoting range Table	0 – 45°
Dimensions L x W x H	490 x 380 x 840 mm
Weight	20 kg

14 SAFETY

14.1 Intended Use

The machine bevel bandsaw is designed for performing cuts into suitable materials under the premise to use the correct combination of bandsaw speed and feed rate.

The intended use incorporates sufficient knowledge of the operator regarding the work with wood bandsaw and regarding accident prevention rules, sufficient material knowledge as well as sufficient and productive maintenance of the machine.

Any manipulation of the machine or its parts is a missuse, in this case HOLZMANN-Machines and its sales partners cannot be made liable for ANY direct or indirect damage.

It is imperative to obey all safety rules as well as assembly, operation and maintenance instructions to keep alive your guarantee rights.

WARNING

- **Use only saw blades allowable for this machine!**
- **Never use a damaged band saw blade!**
- **Use the bandsaw never with defective or without mounted guard**

HIGHEST RISK OF INJURY!

14.1.1 Ambient conditons

The machine may be operated:

humidity	max. 70%
temperature	+5°C to +40°C (+41°F to +104°F)

The machine shall not be operated outdoors or in wet or damp areas.

The machine shall not be operated in areas exposed to increased fire or explosion hazard.

14.1.2 Prohibited use

- The operation of the machine under conditions outside the limits specified in this manual is not permitted.
- Operation of the machine without the protective devices intended is not permitted.
- Dismantling or turning off the protection devices is prohibited.
- It is not permitted the operation of the machine with materials that are not specifically mentioned in this manual.
- Any changes in the design of the machine are not permitted.
- Operating the machine on a way or for purposes contrary to the instructions of this manual is 100% forbidden.

For another, or use beyond that and resulting damage or injuries accepts HOLZMANN-MASCHINEN no responsibility or guarantee

14.2 Safety Information

To avoid malfunctions, damage and physical injury MUST be observed:

- **Safety must be observed and regularly inspected for completeness!**
- **Warning signs and / or labels on the machine which have been removed must be replaced immediately!**

DANGER

Unauthorized modifications and tampering with the machine immediately invalidate all warranty and damage claims.

Work area and keep soil around the machine clean and free of oil, grease and residues of material!

Operation of the machine only when sufficient light, at dusk, you should no longer work.

With fatigue, lack of concentration or under the influence of drugs, alcohol or drugs is prohibited to work with the machine!

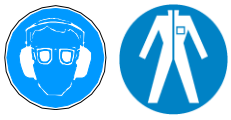

When working on the machine suitable protective equipment such as safety glasses, hearing protection, and protective clothing must be worn!

Never leave the machine running unattended! Before leaving the working area switch the machine off and wait until the machine stops.

Always disconnect the machine prior to any actions performed at the machine.

Avoid unintentional starting

Do not use the machine with damaged switch

The machine may only be operated by qualified personnel enrolled.

Third people, especially children, and people are not trained to think of the work environment away!

When working with the machine, do not wear loose jewelry, wide or protruding from the body of clothing, ties, long hair out, etc.

Loose objects can get caught in rotating parts of the machine and cause serious injury!

DON'T TOUCH THE SAW BLADE! Take care of the rotating saw blade during operation.

14.3 Residual risks

Also in compliance with all safety regulations and if handled according to the following residual risks are noted:

- Risk of injury to hands / fingers through the saw band during operation.
- Risk of injury from contact with live components.
- Risk of injury by breaking or being thrown out of the saw blade or parts thereof, VA in case of overload and incorrect direction of the saw band.
- Hearing loss, unless arrangements have been made by the user for hearing protection.
- Risk of injury from kickback the cut material, ejection of the cut material or parts thereof.
- Risk of injury to the eye by flying parts, even with goggles.
- Danger from inhalation of toxic wood dust in chemically treated workpieces.

These risks can be minimized if all safety regulations are applied, the machine is properly maintained and cared for and the machine as intended and serviced by a trained service professional.

In spite of all safety devices is and remains their healthy common sense and your corresponding technical qualification / training on the operation of a machine like the woodbandsaw HBS 230HQ the most important safety factor!

15 ASSEMBLY

15.1 Initial activities

15.1.1 Delivery content

After receipt of the delivery, if all parts are in order. Report damage or missing parts immediately to your dealer or the shipping company. Visible damage must also be recorded without delay in accordance with the provisions of the warranty on the delivery, otherwise the goods shall be taken as properly.

Content see **5.2**

15.2 preparatory activities

15.2.1 Workplace requirements

Select a suitable place for the machine.
Observe the safety requirements of Chapter **14**, the dimensions of the machine in section **13.2**.
The chosen workplace must have access to a suitable electric supply net hat complies with the machines requirements.
The machine must be placed in a way that at least 0.8m room free space around the machine.
For longer workpieces sufficient additional place before and behind the machine should be calculated.

15.2.2 Preparation of the surfaces

Uncoated metal machine parts have been insulated with a greasy layer to inhibit corrosion.

This layer has to be removed. You can use standard solvents that do not damage the machine surface.

NOTICE

The use of paint thinners, gasoline, harsh chemicals or abrasives for preventing physical damage to the surface!

Therefore:

When cleaning use only mild detergents.

15.3 Assembly of the dismantled parts for transport

The machine is delivered fully assembled, in principle. For transport reasons, some components have to be assembled by the customer.

see assembly point **2**

15.4 Electric connection

ATTENTION

When working with non-grounded machines:
Severe injury or even death may arise though electrocution!
Therefore: The machine must be operated at a grounded power socket!

- The electrical connection of the machine is ready for operation on a grounded outlet!
- The feed mains through with min. 16A be hedged.
- Check whether the mains voltage matches the requirements of the machine.
- A damaged cable must be replaced immediately!

16 OPERATION

16.1 Operating notes

WARNING

Perform all machine settings with the machine being disconnected from the power supply!

ATTENTION

TAKE ATTENTION when cutting long workpieces without additional support!
Hazard of machine damage and injuries through upbouncing workpiece.
Therefore: always support long overhanging workpieces additionally

NOTICE

Let the engine run full speed when you begin to cut a work a workpiece

16.2 Settings

16.2.1 Swivel table

- Loosen the lock with the quick-release lever.
- Swing the table to the angle adjustment knob to the desired angle.
- Fix the table with the table locking handle in front of the first section
- The desired angle is expediently to be checked by test cuts

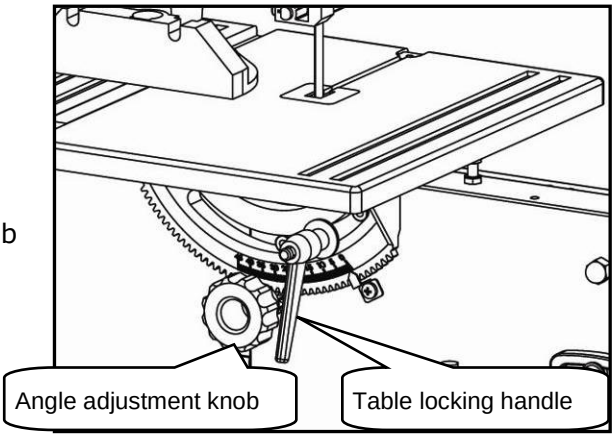

16.2.2 Aligning the saw band / tilt adjustment

If the bandsaw blade is not running in the center on the rollers, is corrected by adjusting the inclination of the caster the position of the saw blade.

- Open the upper and lower rollers cover (Fig. **A**)
- Turn by hand slowly in the upper roller clockwise. The saw blade to run centered on the rubber pads of the caster. If this is not the case, the inclination angle of the upper Sägebandrolle must be corrected.
- Loosen the lock (Fig.**B**) using the rotary knob.
- Turn to control the roller by hand in a clockwise direction around the barrel of the saw band. Note that the running direction of the saw blade from top to bottom. Correct the running of the saw blade by turning the knob left or right.
- Now check the running of the saw band on the lower roller. It should lie in its entire width on the rubber pad. Correct the run until the saw band on the upper Sägebandrolle running centered.

After the adjustments fix again everything and close both covers

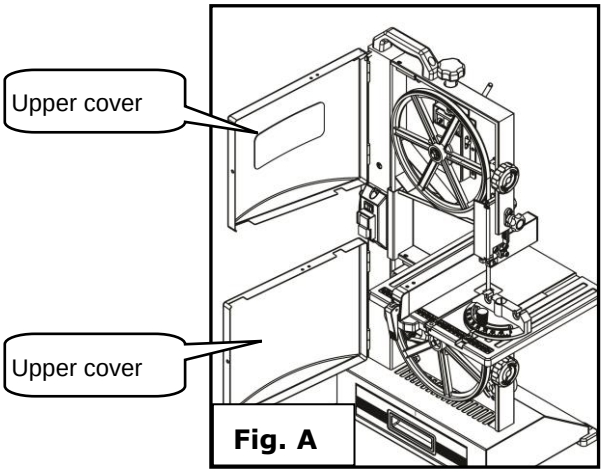

Fig. A

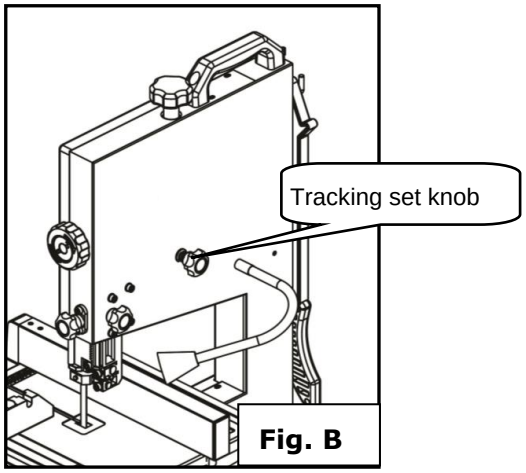

Fig. B

NOTE

After the adjustment and before switching on, turn the upper band saw wheel by hand a few turns to see whether the saw band runs from the rolls. If so, the band saw wheel must be set again.

16.2.3 Bandsaw blade tension

WARNING

Before each operation, the blade tension should be checked!

NOTE

Too much tension: The band saw blade can break.

Not enough tension: The band saw blade begins on the band saw wheels to slip and may come to a halt.

The ideal voltage is in the range between worktable and the upper saw band at about 2mm.

If this is not the case, loosen or tighten the bandsaw blade as follows:

- Clamping by turning the knob clockwise.
- Relax by turning it counterclockwise.

After the end of the work shift the saw band is to relax with the quick-release lever again.

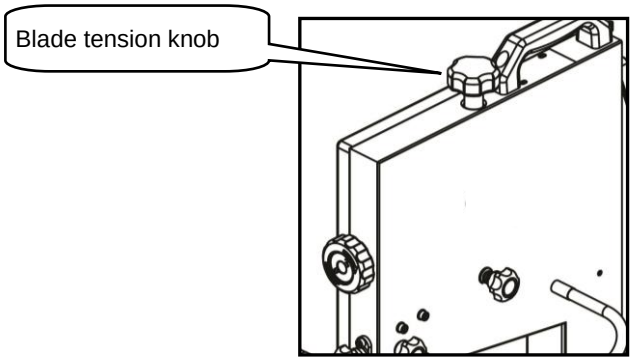

16.3 Saw band adjustment

The saw band is used to adjust the distance from the saw band on the guide rollers.

WARNING

No setting of saw belt when the machine!

Severe injuries to hands and arms by engaging in the current band saw blade!

Setting saw band blade guide only after saw band aligning/tilting and blade tension were checked!

Therefore: Switch off the machine before moving the saw band and wait until the band saw blade is stationary.

16.3.1 Upper blade guide adjustment

The height of the guide must be adjusted prior to each work so that the saw band about 10 mm ends to the workpiece.

- The Locking knob loosen and adjust the appropriate level with the Adjusting knob and then secure again.

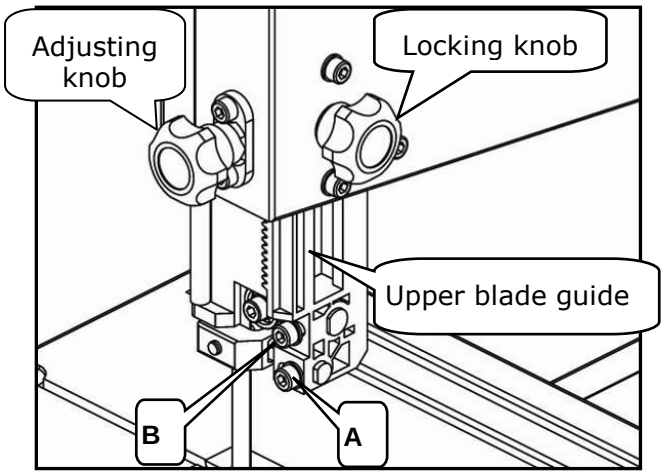

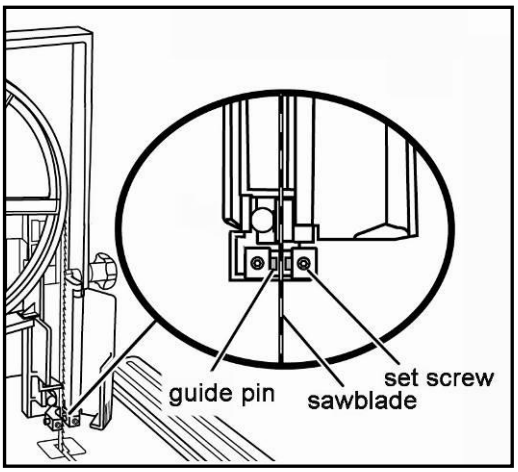

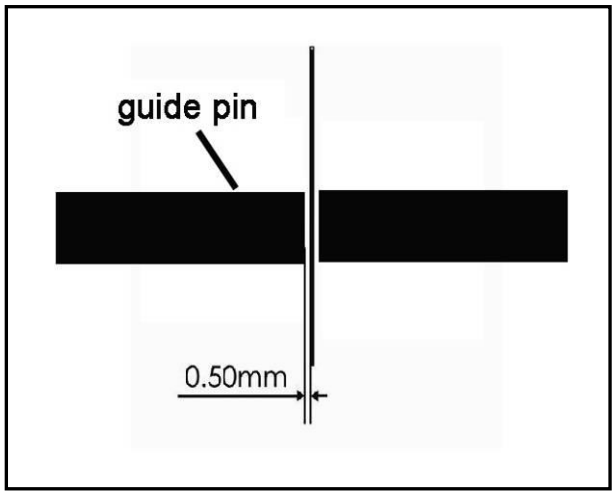

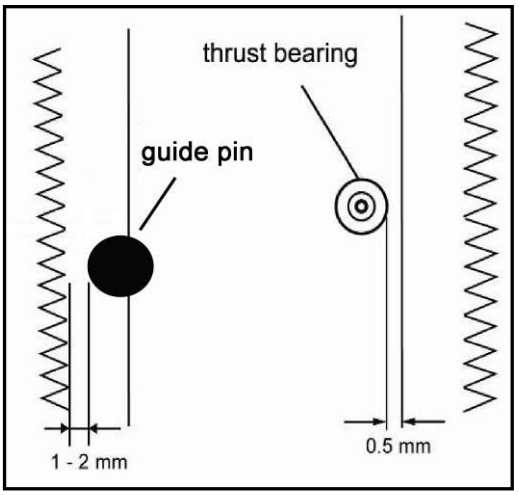

- Loosen the knob screw (**A**) and adjust the guide pin so that the distance between the guide pin is to the saw teeth 1 to 2 mm side. Then fix again.
- Loosen the knob bolt (**B**) and adjust the thrust bearing back so that the distance from the thrust bearing back of the saw blade is ca.0,5mm. Then fix again.

16.3.2 Adjust the lower saw band guide

The lower blade guide must be readjusted after each band saw blade change or tracking adjustment.

- Through the hole **B** and **E**, use hex wrench to loosen socket bolts, adjust guide pin holder D and thrust bearing **C** just like adjusting upper blade guide.

- Loosen the set screw **A**, and adjust the guide pin to a position 0.5mm away from blade. Retighten the set screw.

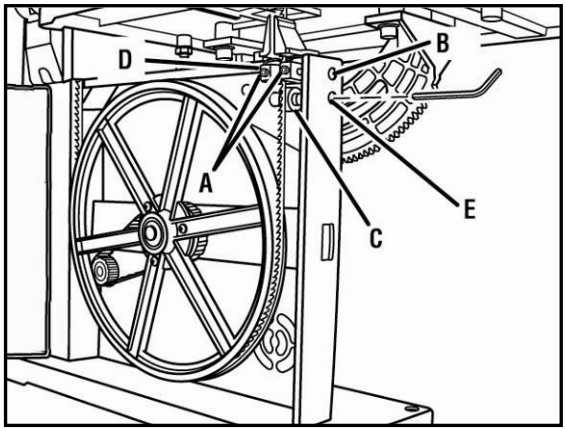

17 OPERATION

17.1 Start / Stop

- To turn ON or OFF the machine, press the main switch
- To use LED-light, turn ON the light switch.

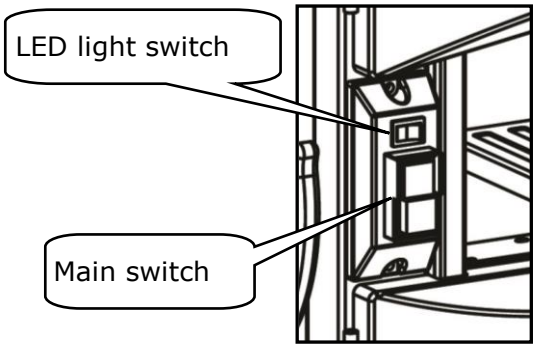

17.1.1 Miter gauge

- To use the miter gauge fence, slide it into the slot provided.
- To adjust the angle of the miter cut, loosen lock, move the miter gauge to the desired position (60 °) and fix him afterwards.

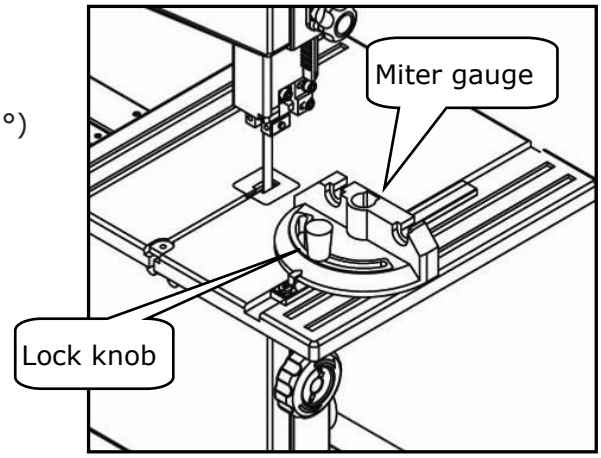

17.1.2 Using push stick

WARNING

The push stick protects against contact with the saw band

- The push stick must always be used when the distance between Band saw blade and and rip fence is less than 150mm.
- If the sliding floor is not used to deposit on the hook
- If damaged, the push stick must be immersed immediately

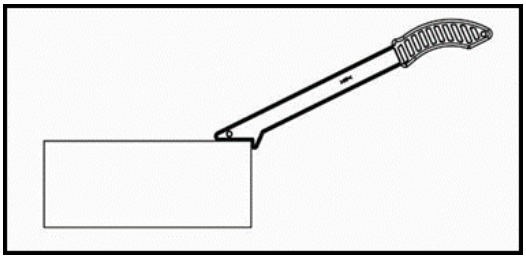

17.1.3 Saw

- Put the workpiece securely on the table on
- Observe the workpiece from start to finish exactly
- Saw the section without interruption in a train
- Turn off the machine after work immediately

17.1.4 Connecting to dust collector

At an extraction suction can be connected. If this is not required, the wood chips collect in the loading below the lower tape roll.

This dust drawer is to be emptied after use of the machine.

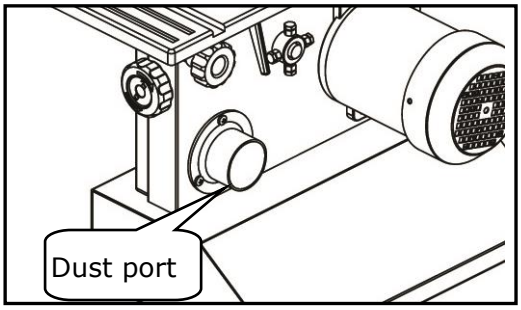

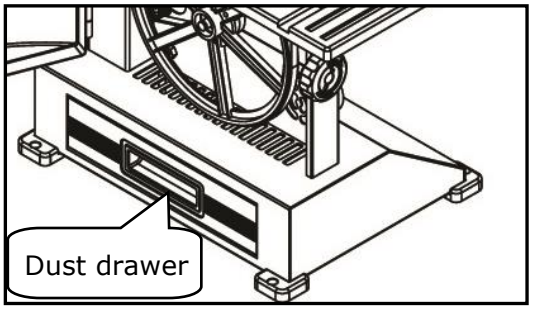

18 MAINTENANCE

	ATTENTION
	Don't clean or do maintenance on the machine while it is still connected to the power supply: **Damages to machine and injuries might occur due to unintended switching on of the machine!** **Therefore: Switch the machine off and disconnect it from the power supply before any maintenance works or cleaning is carried out**

The machine does not require extensive maintenance. If malfunctions and defects occur, let it be serviced by trained persons only.

Before first operation as well as later on every 100 operation hours you should lubricate all connecting parts (if required, remove beforehand with a brush all swarfs and dust).

Check regularly the condition of the security stickers. Replace them if required.

Check regularly the condition of the saw band and the saw band guide.

The good condition and perfect adjustment of the guiding rollers is essential for a smooth band guidance and a clean cut.

Store the machine in a closed, dry location.

NOTICE
Clean your machine regularly after every usage – it prolongs the machines lifespan and is a pre-requisite for a safe working environment. **Repair jobs shall be performed by respectively trained professionals only!**

18.1 Maintenance plan

18.1.1 After each workshift:

- Relaxing the saw band.
- Disconnect the machine from the power supply.
- Clean the machine entirely.
- Lubricate the blade guide with light machine oil a bit.

18.2 Changing the band saw blade

WARNING

Wear gloves when handling with saw blades!

HIGHEST RISK OF CUTTING INJURY!

Before changing the blade, check that the machine is swiched off and disconet from the power suply

ATTENTION: Take care to install the saw band correctly!

Check the direction of the teething

- Unscrew the D-nut and wing screw on the worktable.
- Open the upper and the lower cover.
- Set the upper saw band guide in the lowest position
- Open the cover of upper guide assembly
- Loosen the quick release handle
- Remove the band saw blade from the machine.
- Insert a new bandsaw blade with the **right direction** on the rubber tyres on the band saw wheels.
- Then proceed as described in section 8.2.3 and check the declared adjustment.

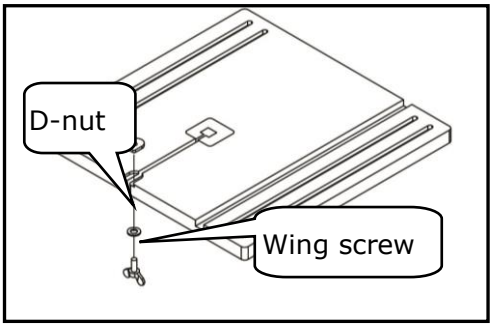

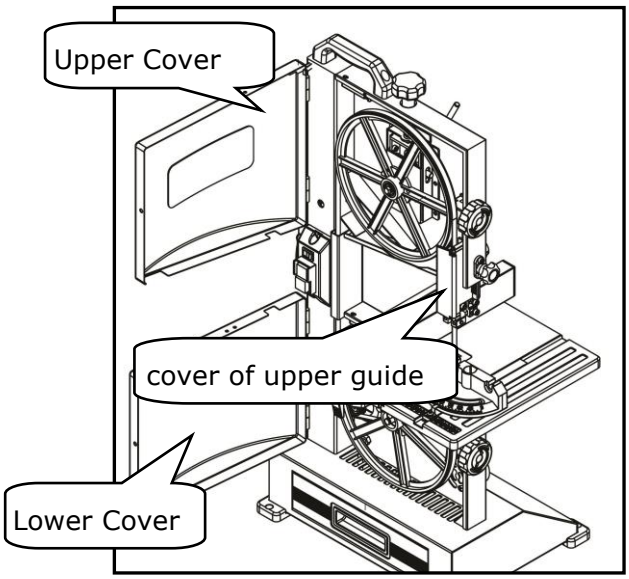

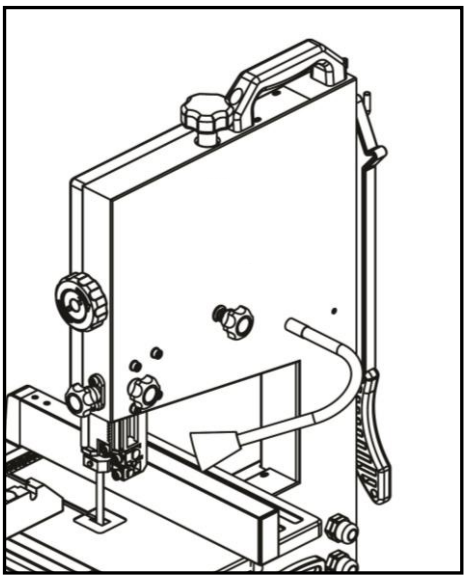

18.3 Changing the timing belt

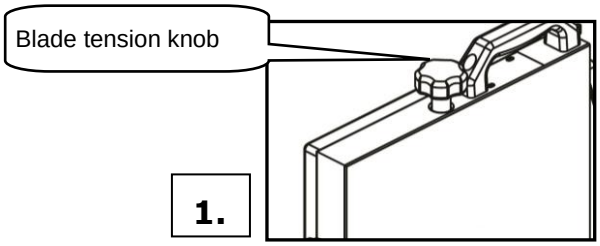

1.

1.
- Relax the saw blade with the blade tension knob

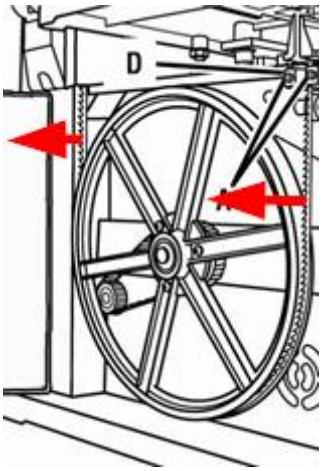

2.

2.
- Open the lower saw band cover and remove the bandsaw blade from the drive shaft.
- **WARNING:** gloves for the sawblade use !

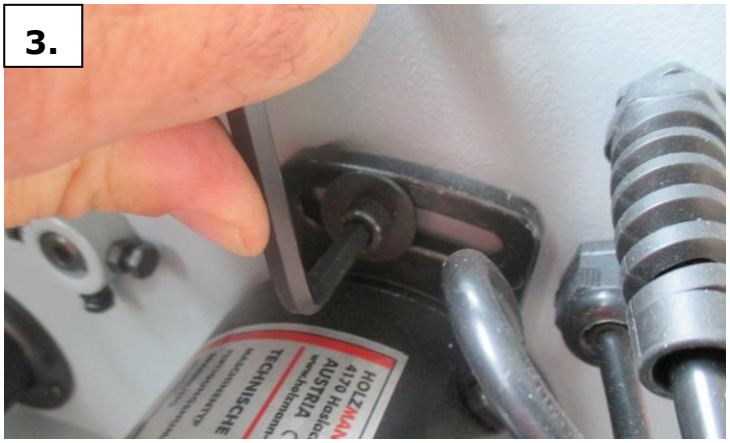

3.

3.
Loosen the timing belt on the motor bracket with an Allen key and relaxing.

4.
- Remove the outer retaining ring with the outer retaining ring pliers.

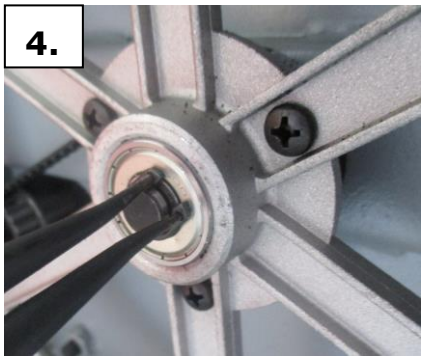

4.

5.
- Remove the drive roller of the drive shaft.
- Replace timing belt and put the drive back to the drive shaft.
- Attach retaining ring
- Insert timing belt in the desired pulleys.
- Timing belt on the motor bracket clamp.
- Bandsaw hang on the drive roller and check the saw band on good leadership.
- bandsaw tension with knob.
- Close Sawband cover

5.

18.4 Cleaning

After each workshift the machine has to be cleaned. Remove chips etc. with a suitable tool. Do not remove them by hand (cutting injury!). Remove dust as well.

NOTICE

The usage of certain solutions containing ingredients damaging metal surfaces as well as the use of scrubbing agents will damage the machine surface!

Clean the machine surface with a wet cloth soaked in a mild solution

18.5 Disposal

Do not dispose the machine in residual waste. Contact your local authorities for information regarding the available disposal options. When you buy at your local dealer for a replacement unit, the latter is obliged to exchange your old

19 TROUBLE SHOOTING

Disconnect the machine from the power supply prior to any checks performed at the machine itself!

Trouble	Possible cause	Solution
Saw stops or will not start	▪ Overload tripped ▪ Saw unplugged ▪ Fuse blown or circuit breaker tripped ▪ Cord damaged	▪ Allow motor to cool and reset by pushing off switch ▪ Check all power connections ▪ Change fuse or reset circuit breake ▪ Change cable
Does not make accurate 45° or 90° cuts	▪ Stop not adjusted correctly ▪ Angle pointer not set accurately ▪ Miter gauge out of adjustment	▪ Check band with square and adjust stop ▪ Check band with square and adjust pointer ▪ Adjust miter gauge
Band wanders during cut	▪ Fence not aligned with band ▪ Warped wood ▪ Excessive feed rate ▪ Incorrect band for cut	▪ Check and adjust fence ▪ Select another piece of wood ▪ Reduce feed rate ▪ Change band to correct type
Saw makes unsatisfactory cuts	▪ Dull band ▪ Band mounted wrong ▪ Gum or pitch on band ▪ Incorrect band for cut ▪ Gum or pitch on table	▪ Replace band ▪ Teeth should point down ▪ Remove band and clean ▪ Change band to correct type ▪ Clean table
Band does not come up to speed	▪ Extension cord too light or too ▪ Low shop voltage	▪ Replace with adequate size cord ▪ Contact your local electric company
Saw vibrate excessively	▪ Base on uneven floor ▪ Bad v-belt ▪ Bent pulley ▪ Improper motor mounting ▪ Loose hardware	▪ Reposition on flat level surface ▪ Replace v-belt ▪ Replace pulley ▪ Check and adjust motor ▪ Tighten hardware
Saw band runs in opposite direction	▪ 2 of the 3 leading phases are switched whether in Plug or socket	▪ Shut off machine immediately. Let the connection to supply circuit be corrected by an electrician!

MANY MALFUNCTIONS AND DEFECTS CAN BE AVOIDED BY LETTING THE MACHINE BE CONNECTED TO YOUR POWER SUPPLY BY A CERTIFIED ELECTRICIAN

20 ELEKTRICKÉ ZPOJENÍ / ELECTRIC DIAGRAM

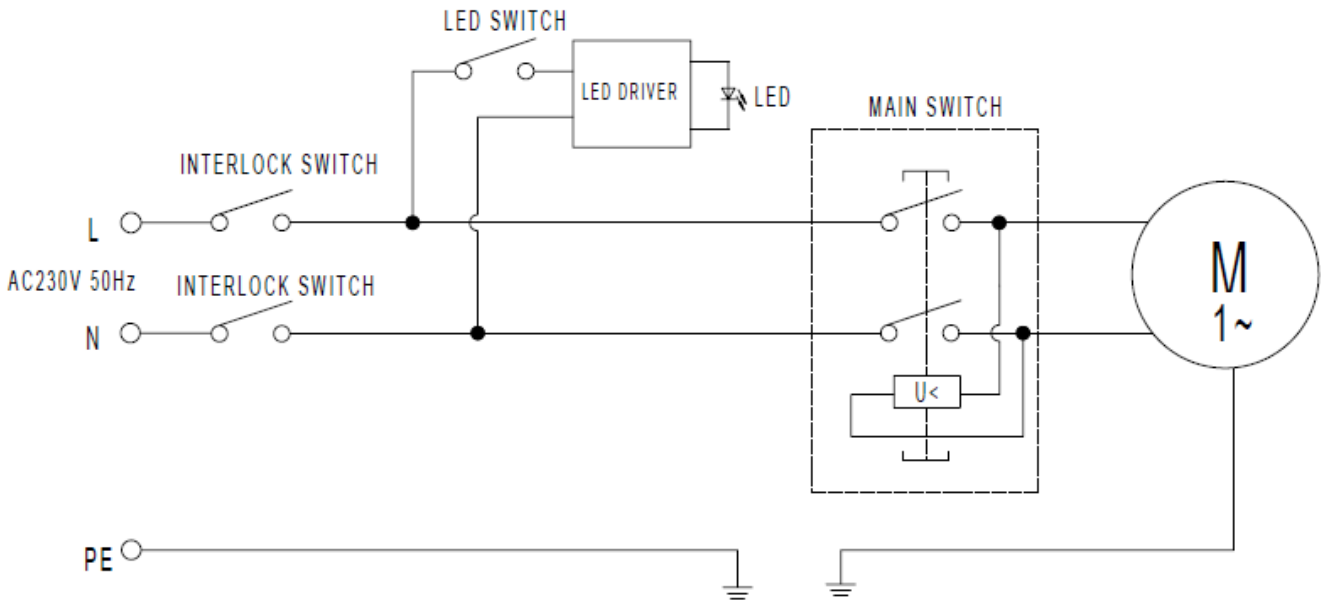

21 NÁHRADNÍ DÍLY / SPARE PARTS

21.1 Objednávka náhradních dílů / spare parts order

Použitím originálních dílů od společnosti Holzmann používáte díly, které spolu dokonale sedí a jejich montáž je časově méně náročná. Originální náhradní díly jsou zárukou delší životnosti stroje.

POKYN

Použití jiných než originálních náhradních dílů má za následek ztrátu záruky!
Platí: Při výměně komponent/dílů používejte pouze originální náhradní díly.

Při objednávání dílů použijte servisní formulář, který najdete na konci tohoto návodu na obsluhu. Vždy uvádějte typ stroje, číslo náhradního dílu a jeho název. Aby se předešlo neshodám, doporučujeme společně s objednávkou zaslat i kopii výkresu rozpadu náhradních dílů, na kterém Vámi požadované díly označíte.

Adresu pro objednání dílů naleznete v kontaktech na zákaznický servis.

With original Holzmann spare parts you use parts that are attuned to each other shorten the installation time and elongate your products lifespan.

IMPORTANT

The installation of other than original spare parts voids the warranty!
So you always have to use original spare parts

By the order of spare parts use the service formular that you can find at the end of this manual. Make always a note of the type, spare part number and a definition of the product. That there are no mistakes, we recommend to make a copy of the spare part list where you can mark with a pen the spare parts which you order.

You find the order address in the preface of this operation manual.

21.2 Výkres náhradních dílů / Explosion drawing

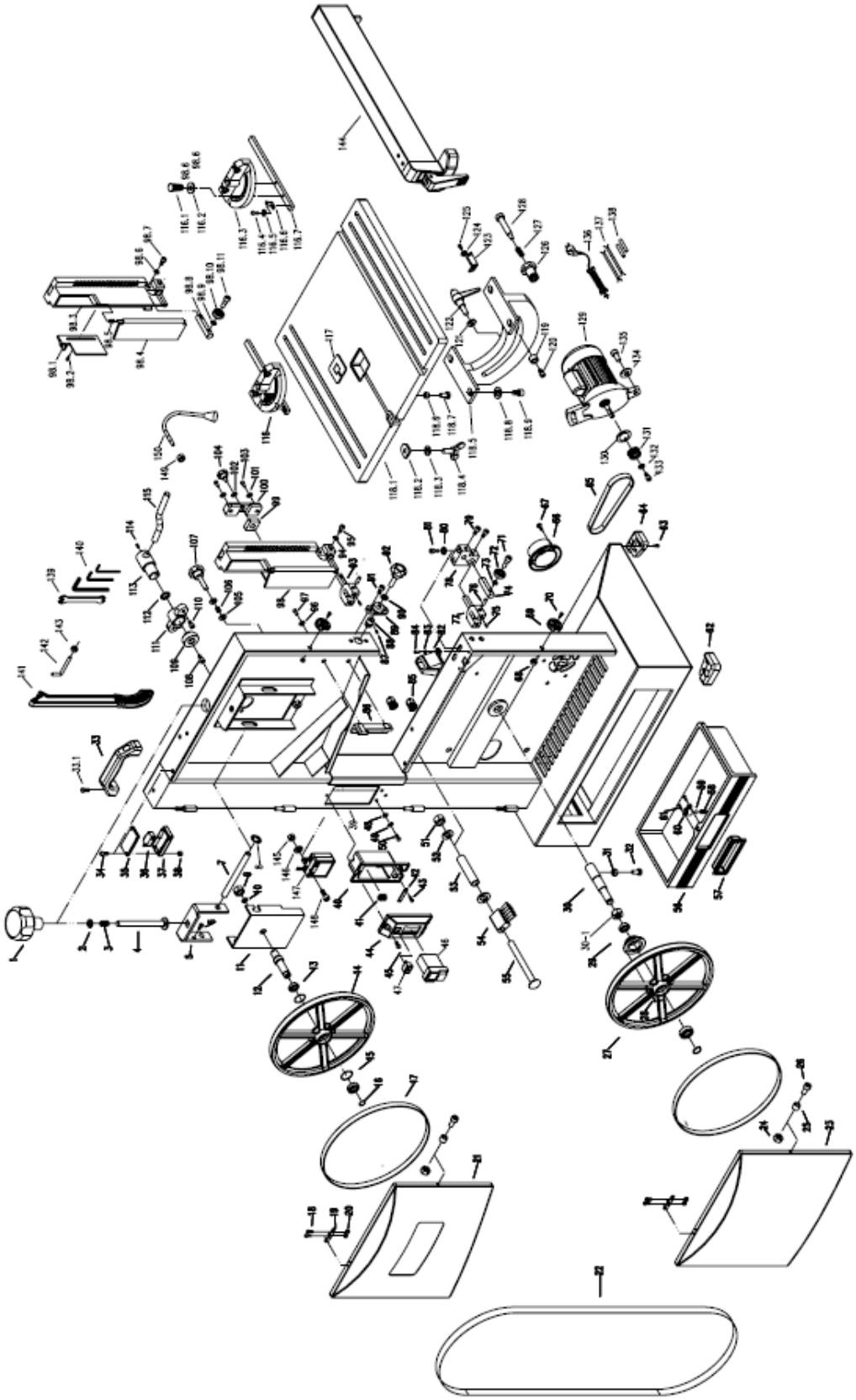

21.3 Seznam náhradních dílů / spare parts list

No.	Description	Qty	No.	Description	Qty
1	Knob	1	93	saw guide block	1
2	flat washer	1	94	flat washer	2
3	pressure spring	1	95	bolt	2
4	bolt	1	96	flat washer	2
5	support	1	97	bolt	2
6	bolt	1	98		
7	round pin	1	98,01	blade block	1
8	nut	2	98,02	bolt	1
9	nut	1	98,03	blade cover	1
10	spring washer	1	98,04	blade block	1
11	wheel support	1	98,05	pressure spring	1
12	wheel shaft	1	98,06	flat washer	1
13	bearing	4	98,07	bolt	1
14	upper disc wheel	1	98,08	bearing studdle	1
15	retaining ring	4	98,09	flat washer	1
16	retaining ring	2	98,10	bearing	1
17	wheel rim	2	98,11	bolt	1
18	bolt	4	99	fixing nut	1
19	sheeting	2	100	fixing plate	1
20	nut	4	101	flat washer	2
21	upper wheel cover	1	102	flat washer	1
22	blade	1	103	bolt	2
23	lower wheel cover	1	104	locking handle	1
24	nut	2	105	flat washer	2
25	cushion cover	2	106	pressure spring	1
26	bolt	2	107	adjustment handle	1
27	lower disc wheel	1	108	bolt	1
28	bolt	3	109	eccentric wheel	1
29	driven gear	1	110	bolt	2
30	lower wheel shaft	1	111	handle seat	1
30,1	locknut	1	112	washer	1
31	nut	4	113	eccentric wheel shaft	1
32	bolt	4	114	bolt	1

33	handle	1	115	handle	1
33,1	bolt	2	116	mite gauge assembly	1
34	bolt	4	116,1	know	1
35	microswitch cover	2	116,2	flat washer	1
36	microswitch	2	116,3	mite gauge	1
37	microswitch box	2	116,4	bolt	1
38	nut	4	116,5	flat washer	1
39	body	1	116,6	pointer	1
40	switch cover	1	116,7	sliding bar	1
41	terminal	1	117	table insert	1
42	**tension disc**	1	118	table assembly	1
43	bolt	2	118,1	table	1
44	switch cover plate	1	118,2	nut	1
45	bolt	2	118,3	flat washer	1
46	switch	1	118,4	bolt	1
47	switch	3	118,5	rotation seat	1
48	spring washer	2	118,6	nut	1
49	tooth washer	2	118,7	bolt	1
50	bolt	2	118,8	flat washer	4
51	nut	1	118,9	bolt	4
52	flat washer	2	119	limit shaft sleeve	2
53	spacer bush	1	120	bolt	2
54	brush	1	121	flat washer	1
55	bolt	1	122	handle	1
56	dust drawer	1	123	pointer	1
57	dust drawer handle	1	124	flat washer	1
58	steel ball spring	1	125	bolt	1
59	steel ball	1	126	rotation handle	1
60	fixing sleeve	1	127	pressure spring	1
61	bolt	2	128	bolt	1
62	foot pad	2	129	motor	1
63	bolt	8	130	sponge ring	1
63,1	flat washer	8	131	gear	1
64	foot pad	2	132	flat washer	1
65	belt	1	133	bolt	1
66	dust port	1	134	flat washer	2

67	bolt	3	135	bolt	2
68	locknut	2	136	power line	1
69	handle	2	137	inner wire	2
70	bolt	2	138	pipe	2
71	bolt	1	139	wrench	1
72	bearing	1	140	wrench	1
73	flat washer	1	141	push stick	1
74	bearing studdle	1	142	hook	1
75	bolt	4	143	nut	1
76	pin	4	144	fence assembly	
77	saw guide block	1	144,01	fence	1
78	saw guide block	1	144,02	shrapnel	1
79	bolt	2	144,03	panel	1
80	flat washer	2	144,04	pull rod	1
81	bolt	2	144,05	locking handle	1
82	lower protecting cover	1	144,06	fence seat	1
83	flat washer	2	144,07	end cup	1
84	bolt	2	144,08	bolt	2
85	strain relief	2	144,09	locknut	1
86	guide block	1	144,10	bolt	4
87	bolt	1	145	nut	1
88	adjustment gear	1	146	flat washer	1
89	adjustment handle seat	1	147	LED driver	1
90	flat washer	1	148	bolt	1
91	bolt	2	149	nut	1
92	adjustment handle	1	150	LED light	1

22 PROHLÁŠENÍ O SHODĚ / CERTIFICATE OF CONFORMITY

CE	**Prodejce / Distributor** HOLZMANN MASCHINEN® GmbH A-4170 Haslach, Marktplatz 4 Tel.: +43 7289 71562-0; Fax.: +43 7289 71562-4 www.holzmann-maschinen.at
Název / name	
	Pásová pila na dřevo / wood bandsaw
Typ / model	
	HBS 230HQ
Směrnice EU / EC-directives	
	▪ 2004/108/EG
Uplatněné normy / applicable Standards	
	▪ EN 55014-1:2006/A2:2011 ▪ EN 55014-2:1997/A2:2008 ▪ EN 61000-3-2:2006/A2:2009 ▪ EN 61000-3-3:2013
Zpracovatel:	Gerhard Brunner, Technische Dokumentation, Marktplatz 4, 4170 Haslach

Tímto prohlašujeme, že výše uvedený typ stroje splňuje bezpečnostní a zdravotní požadavky norem EU. Toto prohlášení ztrácí svou platnost, pokud by došlo ke změnám nebo úpravám stroje, které námi nebyly odsouhlaseny.

Hereby we declare that the above mentioned machines meet the essential safety and health requirements of the above stated EC directives. Any manipulation or change of the machine not being explicitly authorized by us in advance renders this document null and void.

Technická dokumentace
HOLZMANN-MASCHINEN GmbH
4170 Haslach, Marktplatz 4

Haslach, 13.05.2015
Místo / Datum place/date

HOLZMANN MASCHINEN GmbH
Marktplatz 4, 4170 Haslach
weiterer Standort:
Gewerbepark 8, 4707 Schlüsslberg
www.holzmann-maschinen.at

Klaus Schörgenhuber
Jednatel / Director