metabo®

MWB 100

de Originalbetriebsanleitung 7
en Original instructions 10
fr Notice originale 13
nl Oorspronkelijke gebruiksaanwijzing 16
it Istruzioni originali 19
es Manual original 22
pt Manual original 25
sv Bruksanvisning i original 28
fi Alkuperäiset ohjeet 31
no Original bruksanvisning 34
da Original brugsanvisning 37
pl Instrukcja oryginalna 40
el Πρωτότυπο οδηγιών χρήσης 43
hu Eredeti használati utasítás 46
uk Оригінальна інструкція з експлуатації 49

www.metabo.com

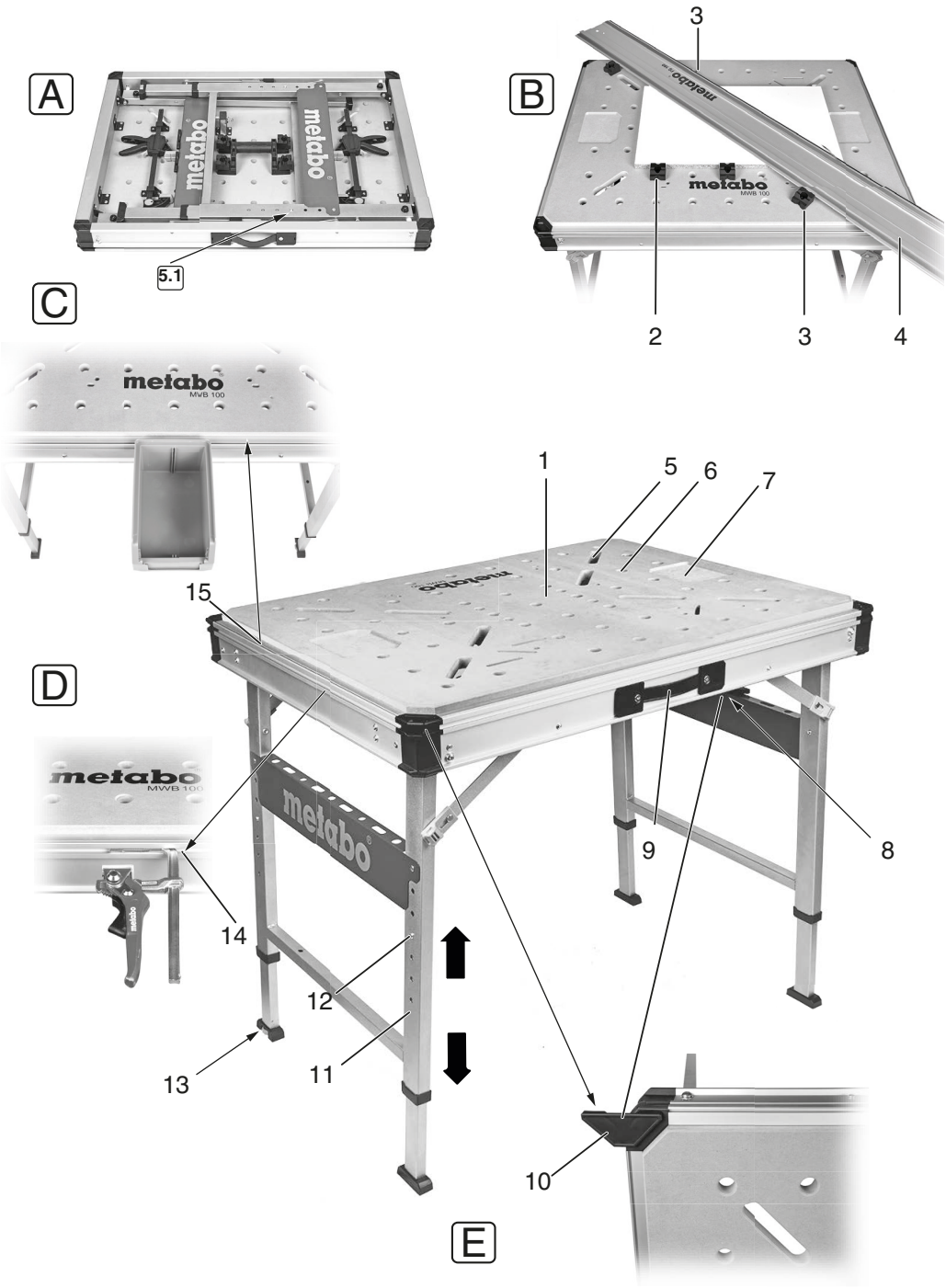
A
5.1
B
3
2
3
4
C
D
E
1
5
6
7
8
9
10
11
12
13
14
15

F

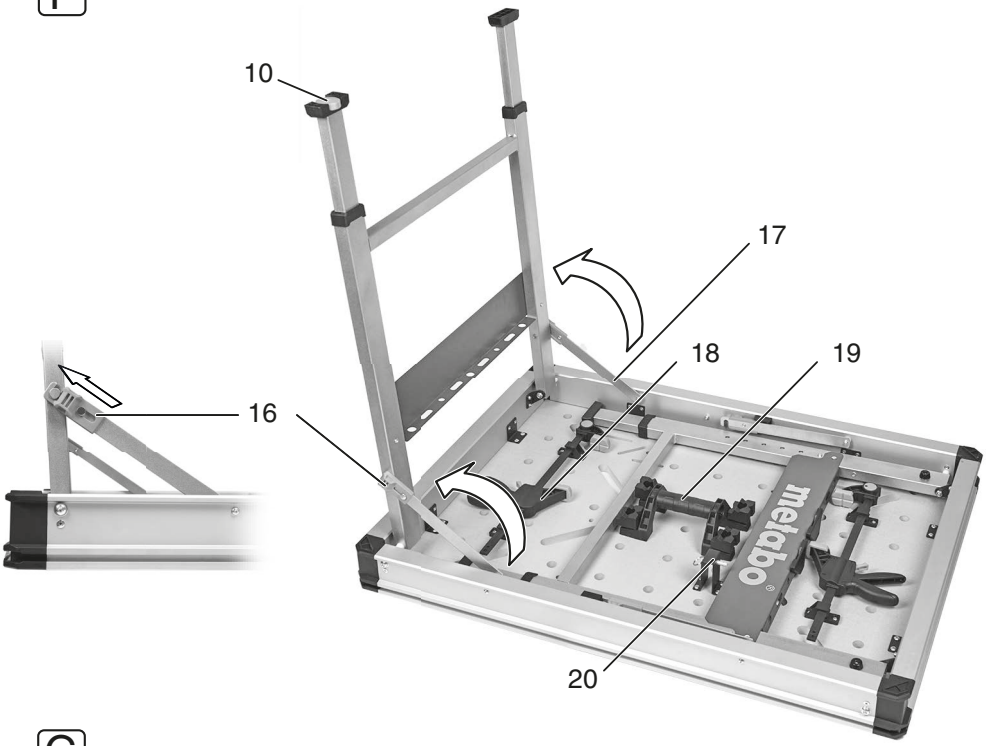

G

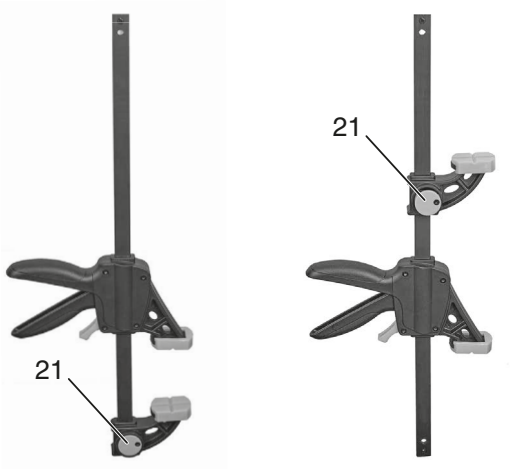

H KGS

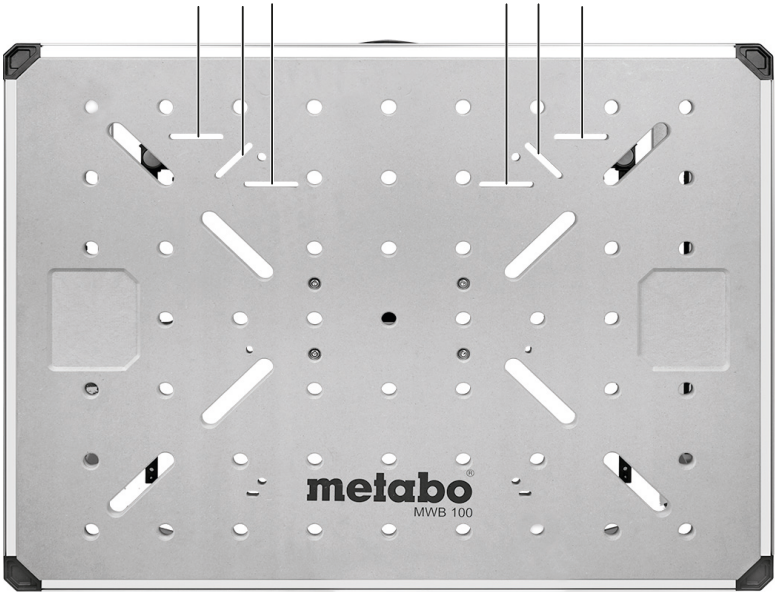

I TS 254 M

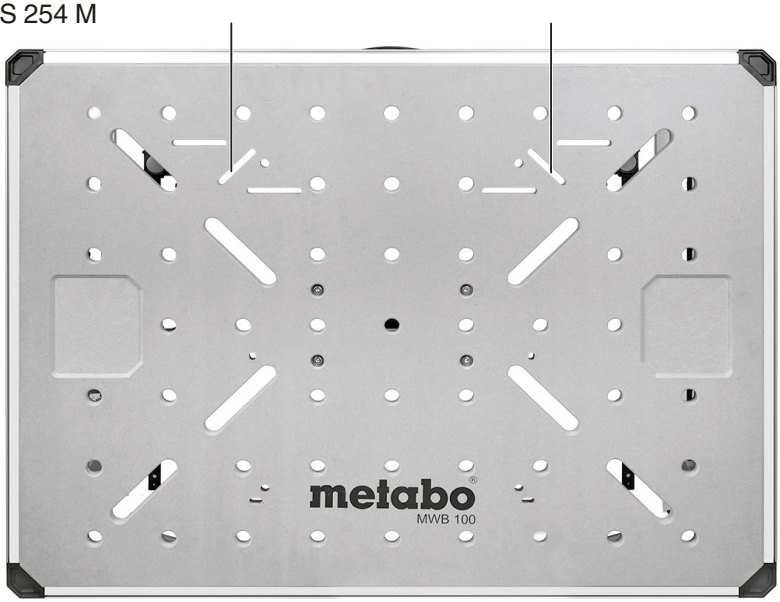

J BAS 261

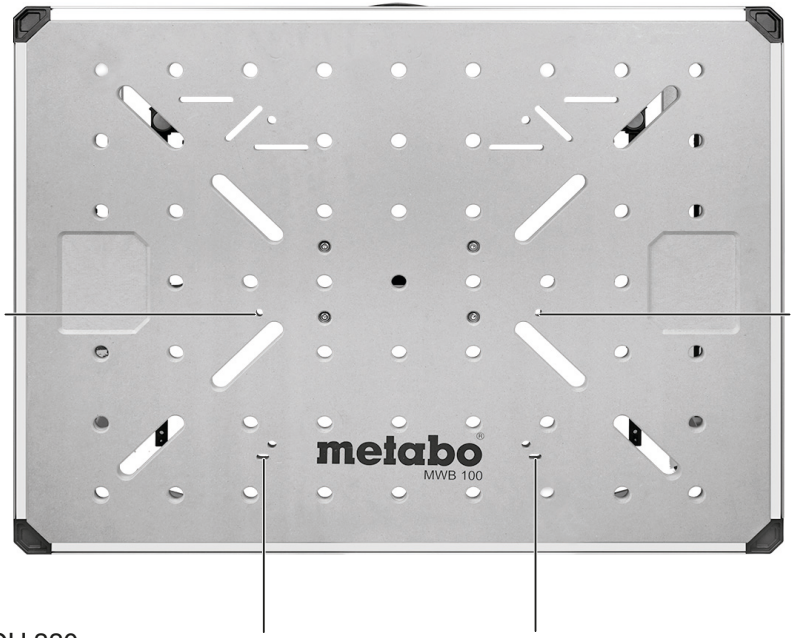

K DH 330

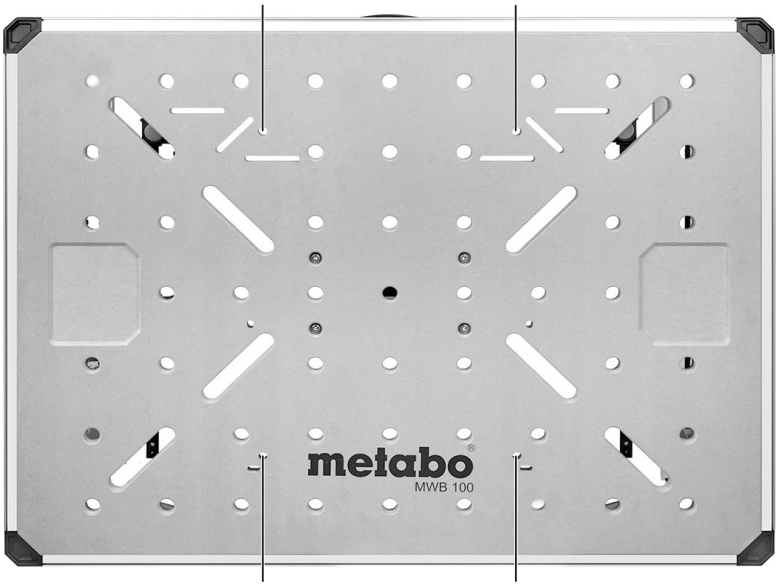

10.		**MWB 100** Serial Number: 26991..
$A1_{L \times B \times H}$	**cm (in)**	75 x 100 x 100 (29 $^{17}/_{32}$ x 39 $^{3}/_{8}$ x 39 $^{3}/_{8}$)
$A2_{L \times B \times H}$	**cm (in)**	75 x 100 x 8,85 (29 $^{17}/_{32}$ x 39 $^{3}/_{8}$ x 3 $^{1}/_{2}$)
H	**cm (in)**	80 - 100 (31 $^{1}/_{2}$ - 39 $^{3}/_{8}$)
m	**kg (lbs)**	22,1 (48,7)
tdw	**kg (lbs)**	120 (264,6)
Ø	**mm (in)**	20 ($^{25}/_{32}$)
mat		MDF
L_T	**mm (in)**	710 (27 $^{15}/_{16}$)
B_T	**mm (in)**	960 (37 $^{13}/_{16}$)
D_T	**mm (in)**	20 ($^{25}/_{32}$)

Original instructions

1. Specified Conditions of Use

MWB 100 is suited as workstation for processing workpieces (e.g. sanding, planing, drilling, sawing etc.) or as a stand for semi-stationary tools.

Clamps can be used to securely clamp workpieces on the worktop.

Observe and comply with the manufacturer's instructions and safety instructions for the machines used and the safety instructions for the workbench.

The user bears sole responsibility for any damage caused by inappropriate use.

Generally accepted accident prevention regulations and the enclosed safety information must be observed.

2. General Safety Information

For your own protection and for the protection of your tool, pay attention to all parts of the text that are marked with this symbol!

WARNING – Read the operating instructions to reduce the risk of injury.

WARNING – Read all safety warnings, instructions, illustrations and specifications provided with this tool. *Failures to respect the following instructions can cause serious injuries.*

Save all warnings and instructions for future reference.
Always include these tools when passing on your power tool.

3. Special Safety Instructions

Risk of personal injury and crushing by moving parts. Keep fingers away from clamping surfaces!

Do not saw deeper than 5 mm into the table top!

Keep bystanders a safe distance away from work! Anyone entering the work area must wear suitable personal protective equipment. Fragments of workpiece or of a broken accessory may fly away and cause injury beyond immediate area of operation.

Set an ergonomic working height for the user.

The maximum load for the workbench is 120 kg!

Securely screw semi-stationary tools to the table!

Remove the mains plug from the socket before carrying out any installation or disassembly!

Remove the battery pack from cordless tools. Unintentional startup of tools must be ruled out.

The assembly and disassembly of the tool is carried out with the worktop facing the floor.

3.1 Safety instructions for all operations

Assemble the workbench correctly and check that all four cross members are locked with the safety catches before starting any work.

Never work with a defective workbench!

Place the workbench on a firm, flat, and horizontal surface. If the workbench table can slip or wobble, the workpiece or power tool cannot be controlled evenly and safely.

First set up the workbench correctly before mounting a power tool or workpiece.

Securely fasten the power tool on the workbench. Slipping of the power tool on the workbench can result in loss of control.

Remove any adjusting key or wrench before turning the power tool on. A wrench or a key left attached to a rotating part of the power tool may result in personal injury.

Remove unnecessary objects from the workbench before starting any sawing operations.

Securely fix workpieces when machining them!

Make sure that long workpieces do not bring the workbench out of balance, Long workpieces must be supported or propped up to prevent dangerous situations caused by uncontrolled tipping.

There is risk of tipping if workpieces protrude. Make sure that the table does not get unbalanced due to lateral clamping and machining of laterally clamped workpieces.

Do not overload the workbench and do not use as seat, ladder or scaffolding. Overloading or standing on the workbench can cause the centre of gravity of the table to shift and the table to tip over.

Prior to starting work, check the functionality of the devices and tools. Never work with a damaged or blunt tool.

Never fasten fragile materials with excessive clamping force. Risk of splintering!

The working area must be tidy and well lit. Cluttered or dark areas invite accidents.

Place heavy objects carefully on the table and apply an even load to the table top.

Make sure that your hands are not crushed when clamping thin workpieces with one-hand clamps.

Take care not to pinch your hands when folding and unfolding the table.

Keep children and other persons away while using the workbench. Distractions can cause you to lose control.

Wear appropriate clothing. Do not wear loose clothing or jewellery. Keep your hair, clothing and

gloves away from moving parts. Loose clothes, jewellery or long hair can be caught in moving parts.

Do not store the workbench outdoors or in damp or wet locations. There is the risk of corrosion and swelling of the worktop.

3.2 Safety instructions when working with semi-stationary tools

Pay attention to the machine-specific safety instructions of the tools used.

If the mounting holes of the tools used do not match the hole pattern of the slotted holes provided, the tool must not be used on the table.

4. Overview

See p 2-4

1 MDF board (replaceable)
2 4 x bench hooks
3 Reference points
4 Guide rail*
5 Slotted hole
6 Round hole (20 mm holes)
7 Small parts storage tray
8 Possible storage location for corner connectors
9 Handle
10 2 x corner connectors
11 Leg
12 Height adjustment leg
13 Levelling wheel
14 Slot for clamp*
15 Slot for open-fronted storage bins*
16 Strut lock
17 Leg strut
18 2 x one-hand clamps
19 Carry handle
20 Leg lock
21 Button one-hand clamp

*equipment-specific /
not included in the scope of delivery

5. Use

5.1 Table assembly and disassembly p. 2 and 3

Place the top of the table on a level, clean surface. Undo the leg lock (20) (fig. F p. 3). Unfold the legs (11). Subsequently fold out the struts (17), hook into the legs and slide the lock (16) over them (fig. F p. 3).
Turn the table around and place onto the legs. If necessary, adjust the correct height by pressing onto the adjustment mechanism (12) and adjust with the levelling wheel (13) (p 2).

Disassemble in reverse order.
The table legs must not exceed the maximum table length for folding. Maximum length for folding, see fig. A p. 2

•**One-hand clamps** (18) can also be used as spreader clamps. This part can be removed by pressing the button (21) and attached again on the other side the other way around. **See fig. G p. 3**.

⚠ **For safe installation, follow the instructions for the semi-stationary unit.**

All clamps narrower than 22 mm can be put through the slotted holes (5). Furthermore, the head of the one-hand clamps can be removed by pressing the button (21) to put through the slotted holes and boreholes. **See fig. G p. 3**.

•The **bench hooks** (2) for versatile use fit into the **right holes** (6). It is possible to clamp a workpiece on the table with almost any clamping element that has a 20 mm mount.

•Angular cuts are possible using the reference points (3), bench hooks (2) and a guide rail (4). **See fig.B p. 2.** Special bench hooks are available for workpieces with a high material thickness.

•The table can be connected to another table along its length or width using corner connectors (10). **See fig. E p. 2**

•A suitable T-groove clamp can be attached to the side of the table in the slot (14). **See fig.D p. 2**

•Suitable open-fronted storage bins can be attached to the side of the table in the groove (15). **See fig. C p. 2**

•Small parts can be stored in the small parts storage tray (7) for storage while working. See **S. 2**

•There is a spare part replacement for the table top.

5.2 Assembling semi-stationary tools

⚠ When using semi-stationary tools, pay attention to all safety instructions in the operating instructions for the semi-stationary tools!

⚠ The semi-stationary tool must be firmly bolted down! If the mounting holes of the tool do not match the hole pattern of the slotted holes provided, the tool must not be used.

⚠ Pull the plug out of the socked or remove the battery pack from the power tool before making any settings or changing accessories in order to avoid unintentional starting of the power tool and accidents.

Fix semi-stationary tools with suitable material and tools.

Examples for fixing Metabo tools with the mounting holes **see fig. H-K p. 4 and 5**:

H: KGS
I : TS 254 M
J: BAS 261
K: DH 330

6. Transport

All parts must be attached firmly.

Remove all materials and tools fixed to the table.

The handle (19) is suited for carrying the device. The table can be easily moved around by the handle (9).

Only transport the table when it is assembled.

7. Accessories

Use only accessories that fulfil the requirements and specifications listed in these operating instructions.

For the complete range of accessories, see www.metabo.com or the main catalogue.

8. Repairs

You can download a list of spare parts from www.metabo.com.

9. Environmental Protection

Packaging materials must be disposed of according to their labelling in accordance with municipal guidelines. Further information can be found at www.metabo.com in the “Service” section.

Observe national regulations on separated collection and recycling of disused tools, packaging and accessories.

Discharge the battery pack in the power tool before disposal. Prevent the contacts from short-circuiting (e.g. by protecting them with adhesive tape).

10. Technical Specifications

A1	=	dimensions when assembled
A2	=	dimensions when folded
H	=	dimensions height adjustment
m	=	dead weight
tdw	=	maximum load capacity
Ø	=	bore diameter
mat	=	table top material
L_T	=	length of table top
B_T	=	width of table top
D_T	=	material thickness of table top