HOLZMANN MASCHINEN GmbH
Marktplatz 4 · A-4170 Haslach
Tel. +43 7289 71 562-0
info@holzmann-maschinen.at

www.holzmann-maschinen.at

Originalfassung

DE BETRIEBSANLEITUNG

ABSAUGANLAGE INKL. ANSCHLUSSVERTEILER

Übersetzung / Translation

EN MANUAL

ES INSTRUCCIONES

DUST COLLECTOR WITH INSERT

ASPIRADOR 2 SACOS

ABS3880_230V
ABS3880_400V

YOUR JOB. OUR TOOLS.

Edition: 28.10.2024 – Revision – 00 – FIA – DE/EN/ES

2 SICHERHEITSZEICHEN / SAFETY SIGNS / SEÑALES DE SEGURIDAD

DE	SICHERHEITSZEICHEN BEDEUTUNG DER SYMBOLE	**EN**	SAFETY SIGNS DEFINTION OF SYMBOLS	**ES**	SEÑALES DE SEGURIDAD SÍMBOLOS

DE CE-KONFORM: Dieses Produkt entspricht den EU-Richtlinien.

EN EC-CONFORM: This product complies with the EC-directives.

ES Conforme a norma CE - Este producto cumple con las directivas de la CE.

DE BETRIEBSANLEITUNG LESEN! Lesen Sie die Betriebs- und Wartungsanleitung Ihrer Maschine aufmerksam durch und machen Sie sich mit den Bedienelementen der Maschine gut vertraut, um die Maschine ordnungsgemäß zu bedienen und so Schäden an Mensch und Maschine vorzubeugen.

EN READ THE MANUAL! Read the user and maintenance carefully and get familiar with the controls in order to use the machine correctly and to avoid injuries and machine defects.

ES LEA EL MANUAL! Lea las instrucciones de funcionamiento y mantenimiento de su máquina con cuidado, y muy familiar a la máquina para que funcione correctamente y así evitar daños en el hombre y la máquina con los mandos de la máquina.

DE Schutzausrüstung tragen!

EN Wear protective equipment!

ES Llevar equipo de protección!

DE Maschine vor Wartung und Pausen ausschalten und Netzstecker ziehen!

EN Stop and pull out the power plug before any break and engine maintenance!

ES Apague la máquina antes de mantenimiento y rompe y desenchufe!

DE Warnung vor gefährlicher elektrischer Spannung!

EN Beware of dangerous electrical voltage!

ES Advertencia de tensión eléctrica peligrosa!

DE Warnung vor rotierenden Teilen!

EN Warning of rotating parts!

ES Advertencia de piezas giratorias!

DE Vor Nässe schützen!

EN Protect from moisture!

ES Proteja de la humedad!

DE Keine offene Flamme! Feuer, offene Zündquelle und Rauchen verboten!

EN No open flame! Fire, open source of ignition and smoking prohibited!

ES ¡Ninguna llama viva! ¡No se permiten fuego, fuentes de ignición abiertas ni fumar!

DE **Warnschilder und/oder Aufkleber an der Maschine, die unleserlich sind oder entfernt wurden, sind umgehend zu erneuern.**

EN **Missing or non-readable security stickers have to be replaced immediately!**

ES **¡Deben sustituirse inmediatamente los letreros de advertencia y/o las pegatinas que haya en la máquina, que se hayan vuelto ilegibles o se hayan retirado!**

3 TECHNIK / TECHNICS / TECNOLOGÍA

3.1 Lieferumfang / Delivery content / Volumen de suministro

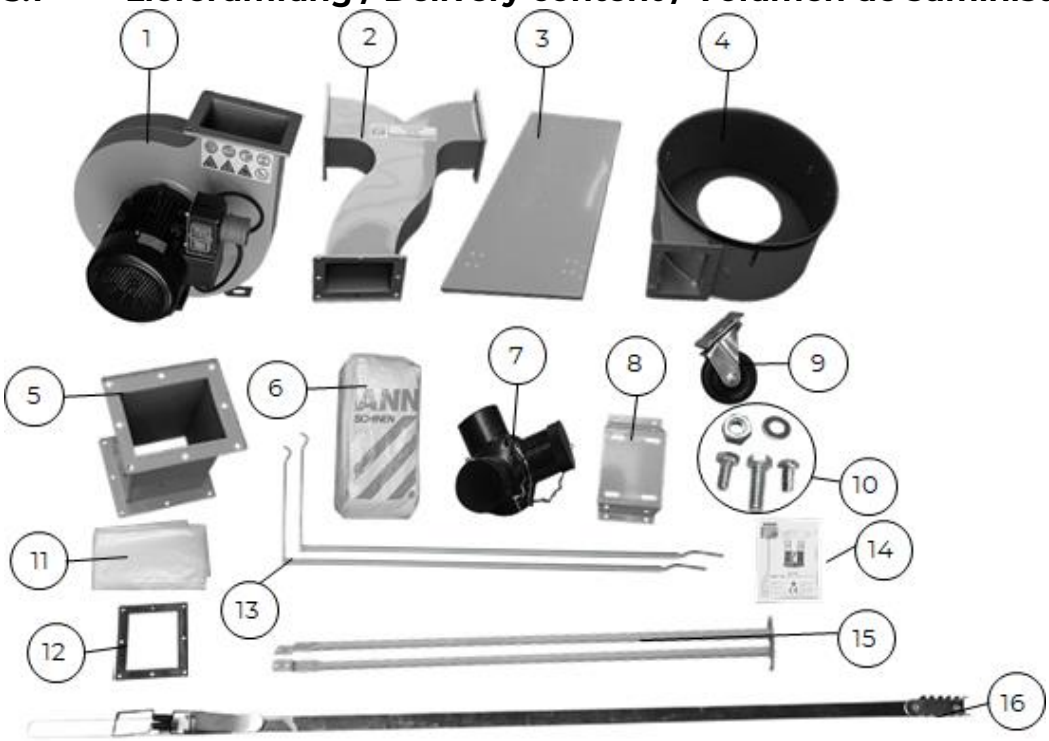

	Bezeichnung / Description / Designación	Qty.		Bezeichnung / Description / Designación	Qty.
1	Motor mit EIN-AUS Schalter & Lüftergehäuse / motor with ON-OFF switch & fan housing / Motor con interruptor ON-OFF y carcasa del ventilador	1	**9**	Lenkrollen / casters / Ruedas de dirección	4
2	Verteilerschacht / distribution shaft / Cámara de distribución	1	**10**	Montage-Material / assembling material / Material de montaje	1 Set
3	Bodenplatte / base plate / Placa de la base	1	**11**	Spänesack / chip bag / Saco para virutas	2
4	Kollektor / collector / Colector	2	**12**	Dichtung / seal / Junta	4
5	Verbindungsschacht / connecting shaft / Cámara de unión	1	**13**	Filtersackstütze / filter bag support / Soporte de saco filtrante	2
6	Filtersack / filter bag / Saco filtrante	2	**14**	Betriebsanleitung / manual / Instrucciones de servicio	1
7	Anschlussadapter 3-fach / connection adapter 3-way / Adaptador de conexión 3-ple	1	**15**	Kollektorstütze / collector support / Soporte de colector	2
8	Motorsockel / motor base / Base del motor	1	**16**	Spannband / bag clamp / Cinta tensora	4

3.2 Komponenten / Components / Componentes

	Bezeichnung / Description / Designación
1	Filtersack / filter bag / bolsa del polvo
2	Kollektor / collector / coleccionista
3	Spänesack / chip bag / bolsa de viruta
4	Schacht mit Verteiler / shaft with distributor / eje de conexión de tuberías
5	Motor mit EIN-AUS Schalter & Lüftergehäuse / motor with ON-OFF switch & fan housing / motor ON-OFF selector
6	Anschlussadapter 3-fach / connection adapter 3-way / Adaptador de conexión 3-ple
7	Bodenplatte mit Lenkrollen / base plate with casters / placa base ruedas

3.3 Technische Daten / Technical Data / Especificaciones Técnicas

Spezifikation / Specification	ABS3880_230V	ABS3880_400V
Spannung / voltage / Tensión	230 V / 50 Hz	400 V / 3/ 50 Hz
Motorleistung S1(100 %) / S6 (40 %) / motor power / potencia del motor	S1 (100 %) ... 2200 W S6 (40 %) ... 3300 W	
Motordrehzahl / motor speed / Régimen de revoluciones del motor	2950 min^{-1}	
Filtersack Durchmesser/Länge / filter bag diameter/length / Diámetro saco filtrante/ longitud	Ø 460 mm / 820 mm	
Spänesack Durchmesser/Länge / chip bag diameter/length / bolsa de viruta de diámetro/longitud	Ø 500 mm / 1230 mm	
Spänesackvolumen / chip bag volume / volumen de la bolsa de chip	2 × 240 l	
Absauganschluss / dust collector plug / boca de aspiración	1 × Ø 150 mm / 3 × Ø 100 mm	
Absaugleistung / dust collector power / flujo de aire	3880 m^3/h	
Unterdruck / hypotension / bajo presión	1750 Pa	
Lüfterraddurchmesser / fan wheel diameter / diámetro del ventilador	Ø 305 mm	
Maschinenmaße (L×B×H) / machine dimensions (L×W×H) / dimensión de la máquina	1410×670×2190 mm	
Verpackungsmaße (L×B×H) / packaging dimensions (L×W×H) /	1170×560×570 mm	
Gewicht Brutto / weight gross / peso	48 kg	
Gewicht Netto / weight net / peso	43 kg	
Schallleistungspegel L_{WA} / sound power level L_{WA} / nivel de potencia acústica L_{WA}	102,4 dB(A) k = 3 dB(A)	
Schalldruckpegel L_{PA} / sound pressure level L_{PA} / nivel de presión sonora L_{PA}	89,4 dB(A) k = 3 dB(A)	

(DE) Hinweis Geräuschangaben: Die angegebenen Werte sind Emissionswerte und müssen damit nicht zugleich auch sichere Arbeitsplatzwerte darstellen. Obwohl es eine Korrelation zwischen Emissions- und Immissionspegeln gibt, kann daraus nicht zuverlässig abgeleitet werden, ob zusätzliche Vorsichtsmaßnahmen notwendig sind oder nicht. Faktoren, welche den am Arbeitsplatz tatsächlich vorhandenen Immissionspegel beeinflussen, beinhalten die Eigenart des Arbeitsraumes und andere Geräuschquellen, d. h. die Zahl der Maschinen und anderer benachbarter Arbeitsvorgänge. Die zulässigen Arbeitsplatzwerte können ebenso von Land zu Land variieren. Diese Information soll jedoch den Anwender befähigen, eine bessere Abschätzung von Gefährdung und Risiko vorzunehmen.
(EN) Notice noise emission: The values given are emission values and therefore do not have to represent safe workplace values at the same time. Although there is a correlation between emission and immission levels, it cannot be reliably deduced whether additional precautions are necessary or not. Factors influencing the actual immission level at the workplace include the nature of the workspace and other noise sources, i.e. the number of machines and other adjacent operations. The permissible workplace values may also vary from country to country. However, this information should enable the user to make a better assessment of hazard and risk.
(ES) Aviso sobre los valores de ruido: Los valores indicados son valores de emisión y, por lo tanto, no representan necesariamente al mismo tiempo valores seguros en el lugar de trabajo. Aunque hay una correlación entre los niveles de emisión y los de inmisión, no se puede deducir con certeza si es necesario adoptar medidas de precaución adicionales o no. Entre los factores que influyen en el nivel de inmisión real en el lugar de trabajo, se encuentran la naturaleza del espacio de trabajo y otras fuentes de ruido, es decir, el número de máquinas y otros procesos de trabajo adyacentes. Asimismo, los valores admisibles en el lugar de trabajo pueden variar de un país a otro. No obstante, esta información debe capacitar al usuario a evaluar mejor los peligros y los riesgos.

11 PREFACE (EN)

Dear Customer!

This manual contains information and important notes for safe commissioning and handling of the dust collector with insert ABS3880_230V and ABS3880_400V, hereinafter referred to as “machine” in this document.

This manual is part of the machine and must not be removed. Save it for later reference and if you let other people use the machine, add this manual to the machine.

Please read and note the chapter Safety!
Before first use read this manual carefully. It eases the correct use of the machine and prevents misunderstanding and damages of machine.

Due to constant advancements in product design, construction, illustrations and contents may deviate slightly. If you notice any errors, please inform us.
We reserve the right to make technical changes!

Check the goods immediately after receipt and note any complaints on the consignment note when taking over the goods from the deliverer!
Transport damage must be reported to us separately to us within 24 hours.
HOLZMANN MASCHINEN GmbH cannot accept any liability for transport damage that has not been reported.

Copyright

© 2024
This documentation is protected by copyright. All rights reserved! In particular, the reprint, translation and extraction of photos and illustrations will be prosecuted.
The place of jurisdiction is the regional court Linz or the court responsible for 4170 Haslach is valid.

Customer service contact

HOLZMANN MASCHINEN GmbH
4170 Haslach, Marktplatz 4
AUSTRIA
Tel +43 7289 71562-0
info@holzmann-maschinen.at
www.holzmann-maschinen.at

12 SAFETY

This section contains information and important notes on the safe commissioning and handling of the machine.

For your safety, read this manual carefully before commissioning. This will enable you to handle the machine safely and thus prevent misunderstandings as well as personal injury and damage to property. Pay special attention to the symbols and pictograms used on the machine as well as the safety information and danger warnings!

12.1 Intended use of the machine

The machine is designed exclusively for the following activities:
Extraction of dust and chips from wood, wood composites or materials with similar physical properties to wood, optionally with up to 3 connection options, within the prescribed technical limits.

NOTE

HOLZMANN MASCHINEN GmbH assumes no responsibility or warranty for any other use or use beyond this and for any resulting damage to property or injury.

12.1.1 Technical restrictions

The machine is designed for the work under the following conditions:

relative humidity	max. 70 %
temperature (operation)	+10° C to +40° C
temperature (storage, transport)	–25° C to +55° C

12.1.2 Prohibited applications /Dangerous misuse

- Operating the machine outdoors.
- Operating the machine without adequate physical and mental fitness.
- Operating the machine without knowledge of the manual.
- Modifying the machine design.
- Extracting flammable gases (e.g. paint or varnish mist).
- Extracting flammable or explosive dusts.
- Extracting liquids.
- Extracting materials above 60° C (e.g. ash or metal chips).
- Operating the machine under fire or explosion hazardous conditions (machine can generate ignition sparks during operation).
- Operating the machine outside the technical limits specified in this manual.
- Removing of the safety markings attached to the machine.
- Modifying, circumventing or disabling the safety devices of the machine.

The non-intended use or the disregard of the explanations and instructions described in this manual will result in the expiration of all warranty claims and compensation claims for damages against HOLZMANN MASCHINEN GmbH.

12.2 User requirements

The machine is designed to be operated by one person. The prerequisites for operating the machine are physical and mental fitness as well as knowledge and understanding of the operating instructions. Persons who, due to their physical, sensory or mental capabilities, inexperience or lack of knowledge, are unable to operate the machine safely must not use the machine without supervision or instruction by a responsible person.
Please note that locally applicable laws and regulations determine the minimum age of the operator and may restrict the use of this machine!
Put on your personal protective equipment before working on the machine
Work on electrical components or equipment may only be carried out by a qualified electrician or under the guidance and supervision of a qualified electrician.

12.3 General safety instructions

To avoid malfunctions, damage and health impairments when working with the machine, the following points must be observed in addition to the general rules for safe working:

- Check the machine for completeness and function before starting. Only use the machine if the separating and other non-separating protective devices required for machining have are fitted.
- Make sure that the guards are in good working order and properly maintained.
- Select a level, vibration-free surface as the installation area.
- Ensure sufficient space around the machine.
- Ensure sufficient lighting conditions at the workplace to avoid stroboscopic effects.
- Ensure a clean working environment.
- Keep the area around the machine free of obstacles (e.g. dust, chips, cut-off workpiece parts, etc.).
- Only use tools that are in perfect condition and free of cracks and other defects (e.g. deformations).
- Remove tool keys and other setting tools before switching on the machine.
- Check the machine's connections for strength before each use.
- Never leave the running machine unattended. Switch off the machine before leaving the working area and secure it against unintentional or unauthorized restarting.
- The machine may only be operated, maintained or repaired by persons who are familiar and who have been informed about the dangers arising in the course of this work.
- Ensure that unauthorized persons keep a safety distance from the machine and keep children away from the machine.
- Always work with care and the necessary caution and never use excessive force.
- Do not overload the machine.
- Hide long hair under hair protection.
- Wear close fitting protective work clothing and suitable protective equipment (eye protection, dust mask, ear protection; gloves only when handling tools).
- Never wear loose jewellery, loose clothing or accessories (e.g. tie, scarf).
- Do not work on the machine if you are tired, not concentrated or under the influence of medication, alcohol or drugs!
- Remove the protective grille is prohibited.
- Do not use the machine in areas where vapors of paints, solvents or flammable liquids represent a potential danger (danger of fire or explosion!).
- Warning signs and/or stickers on the machine that are illegible or have been removed must be replaced immediately!

12.4 Electrical safety

- Make sure that the machine is grounded.
- Only use suitable extension cables.
- A damaged or tangled cable increases the risk of electric shock. Handle the cable with care. Never use the cable to carry, pull or disconnect the power tool. Keep the cable away from heat, oil, sharp edges or moving parts.
- Proper plugs and outlets reduce the risk of electric shock.
- Water entry into the machine increases the risk of electric shock. Do not expose the machine to rain or moisture.
- The machine may only be used in humid environments if the power suppy is protected by a residual current circuit breaker.
- Before connecting the machine always make sure that the main switch is switched off.
- Use the machine only when the ON-OFF switch is in good working order.

12.5 Special safety instructions for this machine

- Work only in well-ventilated rooms!
- Keep the machine away from potential ignition sources such as open flames – risk of fire and explosion!
- Do not insert any objects into the dust collector plug and keep it free of deposits that could impair the dust collector power.
- The extraction of flammable vapours, liquids, dust, ash or chips (gases, fuel, cleaning agents, paint residues, hydrogen, coal, magnesium, grain dust, stone dust, hot ashes, cigarette butts, etc.) is strictly prohibited.
- Removal of the protective grill is prohibited.
- Inhaling wood dust is hazardous to health! Always wear a dust mask when emptying the chip bag.

- Only operate the machine with a perfect filter and chip bag. Chip bags made of polyethylene must be at least 0.2 mm thick. If bags made of other materials are used, they must have the same mechanical strength.
- When disposing of the chip waste, ensure that it is disposed of in an environmentally friendly manner!

12.6 Hazard warnings

Despite intended use, certain residual risk factors remain. Due to the structure and construction of the machine, hazardous situations may occur which are identified in these operating instructions as follows:

DANGER	
	A safety instruction designed in this way indicates an imminently hazardous situation which, if not avoided, will result in death or serious injury.

WARNING	
	A safety instruction designed in this way indicates a potentially hazardous situation which, if not avoided, could result in death or serious injury.

CAUTION	
	A safety instruction designed in this way indicates a possibly hazardous situation which, if not avoided, may result in minor or moderate injury.

NOTE	
	A safety notice designed in this way indicates a potentially hazardous situation which, if not avoided, may result in property damage.

Regardless of all safety regulations, your common sense and your appropriate technical aptitude/training are and remain the most important safety factors in the error-free operation of the machine. **Safe working depends on you!**

13 TRANSPORT

For proper transport, follow the instructions and information on the transport packaging regarding center of gravity, slinging points, weight, means of transport to be used and prescribed transport position, etc.
Transport the machine in its packaging to the place of installation. Ensure the correct body posture when lifting, carrying and setting down the load.

Lifting / Setting down

- When lifting/setting down, ensure that you are standing firmly (legs hip-width apart).
- Lift/set down load with knees bent and back straight.
- Do not lift/set down load with a jerk.

Carrying

- Carry load with both hands as close to body as possible.
- Carry load with straight back.
- When transporting the assembled machine, ensure to lift it only by the machine body and not by the attachments.

If you transport the machine with a vehicle, ensure that the load is secured appropriately!

14 ASSEMBLY

14.1 Preparation

14.1.1 Check delivery content

Check the delivery immediately for transport damage and missing parts. Report any damage or missing parts to your dealer or the shipping company immediately. Visible transport damage must also be noted immediately on the delivery note in accordance with the provisions of the warranty, otherwise the goods are deemed to have been properly accepted.

14.1.2 Requirements for the installation site

The selected installation site must ensure a suitable connection to the power supply. Observe the safety requirements and the dimensions of the machine.

14.2 Assemble

The machine has been disassembled for transport and must be reassembled before use. Follow the instructions below:

	1. Fix casters • Fix the 4 casters to the bottom of the base plate (1) at the corners with 4 round head screws M6×10 each, the corresponding washers and nuts.
	2. Fix motor base • Secure the motor base to the base plate (2) with 4 screws M8×16 and washers.
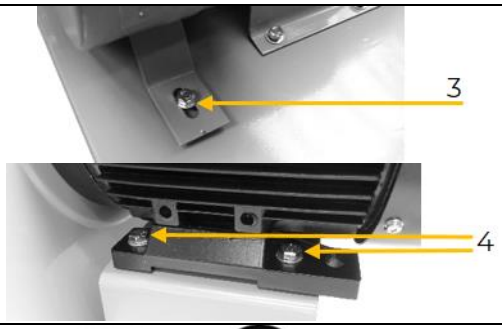	**3. Fix motor with ON-OFF switch & fan housing** • Secure the motor with ON-OFF switch & fan housing to the base plate (3) with 2 screws M8×16 and washers. • Secure the motor with ON-OFF switch & fan housing to the motor base with 4 screws M8×24, the washers and the nuts (4).
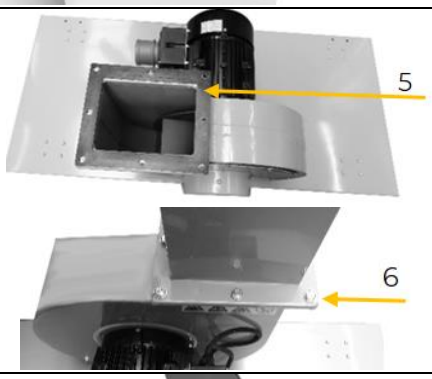	**4. Fix connecting shaft** • Place a seal on the opening of the fan housing (5). • Place the connection shaft on the opening of the fan housing with the seal and connect the parts with 8 screws M8×16 and the washers.
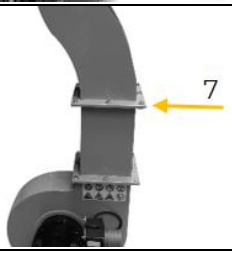	**5. Fix distribution shaft** • Place a seal on the opening of the connection shaft. Set the distribution shaft on it and fix it with 8 screws M8×16 and the washers (7).
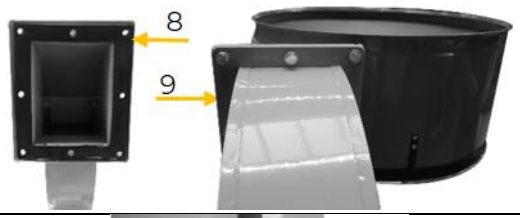	**6. Fix collector** • Place a seal on the opening of the distribution shaft (8). Fasten the collector to the seal and the distribution shaft (9) with 8 screws M8×16 and washers. • Repeat this procedure on the 2nd side of the distribution shaft.
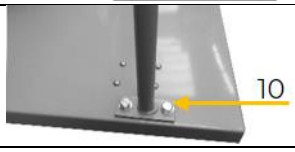	**7. Fix collector support** • Fasten the 2 collector supports to the base plate with 2 screws M8×16 and washers each (10).

	8. Fix filter bag support • Connect the upper part of the collector support to the collector and the filter bag support (11). Use 2 screws M8×16 and washer. • Repeat this procedure for the 2nd side of the distribution shaft.
	9. Fix filter bag • Thread the bag clamp into the opening provided in the filter bag. • Pull the filter bag over the upper collector edge. • Fix the filter bag by engaging the spring and closing the bracket (12). • Hook the loop at the upper end of the filter bag into the filter bag support. • Repeat this procedure on the 2nd collector.
	10. Mount chip bag • Slide the chip bag under the clamps on the lower collector edge (13). • Fix the chip bag with the bag clamp by engaging the spring and closing the bracket. • Repeat this procedure on the 2nd collector.
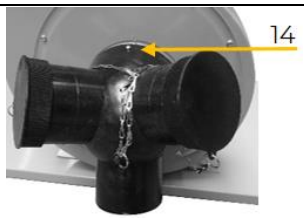	**11. Fix connection adapter 3-way** • Fix the connection adapter 3-way with the screw (14).

14.3 Electrical connection

WARNING

Dangerous electrical voltage!
Risk of injury due to dangerous electrical voltage!
→ The machine may only be connected to the power supply and the associated checks carried out by a qualified electrician or under the instruction and supervision of a qualified electrician!

- Check, whether the neutral connection (if existing) and the protective grounding function properly.
- Check, whether the supply voltage and the frequency correspond to the specifications of the machine.

NOTE

Deviation of the supply voltage and frequency!
A deviation from the value of the supply voltage of ±5 % is permissible.
A short-circuit fuse must be provided in the power supply system of the machine!

- Use a supply cable that fulfils the electrical requirements (e.g. H07RN, H05RN) and take the required cross-section of the supply cable from a current carrying capacity table. Pay attention to the measures for protection against mechanical damage.
- Make sure that the power source is protected by a residual current circuit breaker.
- Connect the machine only to a properly grounded outlet.
- When using an extension cable, make sure that the dimension matches the connected load of the machine. The connection power can be found in the technical data, the correlation of cable cross-section and cable lengths can be found in the technical literature or obtain information from a specialist electrician.
- A damaged cable must be replaced immediately.

14.3.1 Setting up a 400 V machine

- The grounding conductor is yellow-green.

- Connect the supply cable to the corresponding terminals in the input box (L1, L2, L3, N and PE). If a CEE plug is available, the connection to the power supply is made through an appropriately powered CEE coupling (L1, L2, L3, N and PE).

Plug connection 400V	5-wire: **with** N-conductor 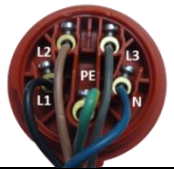	4-wire: **without** N-conductor 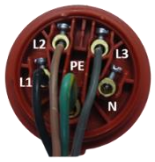

- After the electrical connection, check the correct operating direction. If the machine runs in the wrong direction, swap two conductive phases, e.g. L1 and L2, at the connection plug.

NOTE

- The wrong operating direction of the machine reduces the dust collector power up to 50 %.
- Operation is only permitted with residual current device (RCD) with maximum residual current of 30 mA.

15 OPERATION

Only operate the machine when it is in a perfect condition. Before each operation, a visual inspection of the machine must be carried out. Safety devices and operating elements must be checked carefully. Check screw connections for damage and tight fit.

15.1 Connection to the wood working machine

NOTE

Do not work with the woodworking machine until the dust collector has reached full speed.

- Position the dust collector next to the woodworking machine so that the machine does not obstruct you when working with the woodworking machine. Ensure that the hoses are laid properly on the floor and mark unavoidable trip hazards.
- The extraction hoses used must be made of flame-retardant material (DIN4102 B1) and be permanently antistatic (or earthed on both sides) and comply with the relevant safety regulations.

- Fix a dust hose to the dust collector plug of the dust collector (1) and to the woodworking machine:
  1 × Ø 150 mm ot up to 3 × Ø 100 mm
- Close the unused dust collector plug with the sealing cap.
- The distance between the dust collector and the woodworking machine should not exceed 10 linear meters.

15.2 Switch the machine on and off

ON-OFF switch
Press the switch – on button (1) to switch on.
Press the switch – off button (2) to switch off.

16 CLEANING, MAINTENANCE, STORAGE, DISPOSAL

WARNING

Danger due to electrical voltage!
Handling the machine with connected power supply may result in serious injury or death.

→ Always disconnect the machine from the power supply beforecleaning, maintenance or repair work and secure it against unintentional reconnection.

16.1 Cleaning

Regular cleaning guarantees the long service life of your machine and is a prerequisite for its safe operation.

NOTE

Incorrect cleaning products can attack the finish of the machine. Do not use any solvents, nitro thinners or other cleaning products that could damage the machine's finish.
Observe the specifications and instructions of the cleaning agent manufacturer.

- Remove chips and dirt particles from the machine after each use with a proper tool.
- Prepare the surfaces and lubricate the bare machine parts with an acid-free lubricating oil (e.g. WD40 rust inhibitor).
- Clean the filter bags periodically to maintain its effectiveness.
- Clean the dust collector plug at periodic intervals. Deposits can accumulate, especially at the protective grille, which impair the extraction performance.

16.2 Maintenance

The machine is low-maintenance and only a few parts need to be serviced. Malfunctions or defects that could affect your safety must be repaired immediately!

- Before each operation, check the perfect condition of the safety devices.
- Regularly check the perfect and legible condition of the warning and safety labels of the machine.
- Use only proper and suitable tools.
- Use only original spare parts recommended by the manufacturer.

16.2.1 Maintenance plan

The type and degree of machine wear depends to a large extent on the operating conditions. The following intervals apply when the machine is used within the technical limits:

Interval	Components	Action
before usage	• cable connection	• Check and replace, if damaged.
	• motor with switch unit & fan housing	• Check for dirt and clean if necessary.
	• bag clamps	• Check for tight fit and retighten if necessary.
once a week	• screw connections	• Check for tight fit and retighten if necessary.
if required	• chip bags	• Check and replace if necessary, see next chapter.
	• filter bags	• Check and, if necessary, tapp out or replace, see next chapter after next.

16.2.2 Replace chip bag

NOTE

Replace the chip bag when it is 60-70 percent full. Only use chip bags that correspond to the dimensions of the machine. Use only 100 percent tight chip bags.

WARNING

Danger from wood dust!
Inhalation of wood dust is hazardous to health!
→ Always use a dust mask when replacing and emptying the chip bag! Ensure an environmental compatible disposal of the chip waste.

Procedure

1. Switch off the machine ten minutes before replacing the chip bag so that the dust particles can settle.
2. Disconnect the machine from the power supply.
3. Open the bag clamp.
4. Carefully pull the chip bag from the collector and close the chip bag.
5. Pull the new chip bag over the lower collector edge and slide it under the clamps. Fix the chip bag by placing the bag clamp around the chip bag, engaging the spring and closing the bracket.

16.2.3 Tapp out the filter bag

Immediately after switching off the machine, tap the outside of the filter bag so that the filtered dust particles inside fall vertically into the chip bag.

16.2.4 Replace filter bag

NOTE

Only use filter bags that correspond to the dimensions of the machine.

WARNING

Danger from wood dust!
Inhaling wood dust is hazardous to health!
→ Always use a dust protection mask when replacing the filter bag!

Procedure

1. Switch off the machine ten minutes before changing the filter bag so that the dust particles can settle.
2. Disconnect the machine from the power supply.
3. Open the bag clamp.
4. Carefully pull the filter bag from the collector.
5. Remove the bag clamp from the filter bag and close the filter bag.
6. Thread the bag clamp into the opening provided in the new filter bag.
7. .Pull the new filter bag over the upper collector edge. Fix the filter bag by engaging the spring and closing the bracket. Hang the loop at the upper end of the filter bag into the hook of the filter support.

16.3 Storage

Store the cleaned machine in a dry, frost-proof and lockable place when not in use. Disconnect the machine from the power supply. Make sure that unauthorised persons and especially children do not have access to the machine.

NOTE

Improper storage can damage and destroy important components. Only store packed or already unpacked parts under the intended ambient conditions!

16.4 Disposal

Observe the national waste disposal regulations. Never dispose of the machine, machine components or operating equipment in the residual waste. If necessary, contact your local authorities for information regarding available disposal options.
If you purchase a new machine or equivalent equipment from your specialist dealer, he is obliged in certain countries to dispose of your old machine properly.

17 TROUBLESHOOTING

WARNING

Danger due to electrical voltage!
Handling the machine with connected power supply may result in serious injury or death.
→ Disconnect the machine from the power supply before starting work to eliminate defects!

Many possible sources of error can be eliminated in advance if the machine is properly connected to the power supply.
If you are unable to carry out the necessary repairs properly and/or do not have the required training, always consult a specialist to solve the problem.

Trouble	Possible cause	Solution
motor does not run	• switch defective	• Repair switch.
	• no power supply	• Check power supply, replace fuse or switch contactor if necessary.
dust leakage	• leaked or clogged connections	• Check connections, remove clogging.
	• chip bags or filter bags defective or incorrectly mounted	• Check bags and replace if necessary.
loud noise in fan housing	• clogging due to large part being sucked in	• Remove clogging part.
	• loose fan wheel	• Tighten fan wheel.

25 ELEKTRISCHER SCHALTPLAN / WIRING DIAGRAM

DIAGRAMA ELÉCTRICO

WIRE DIAGRAM: (230V/50Hz, 1 PHASE)

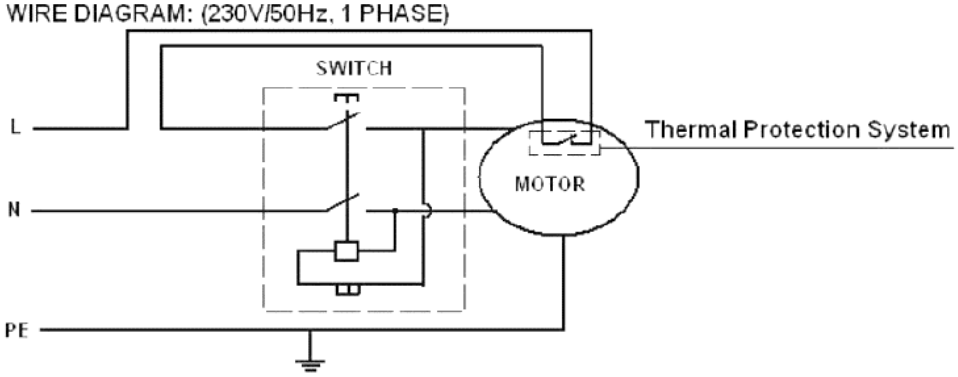

WIRE DIAGRAM : (400V/50Hz, 3PHASE)

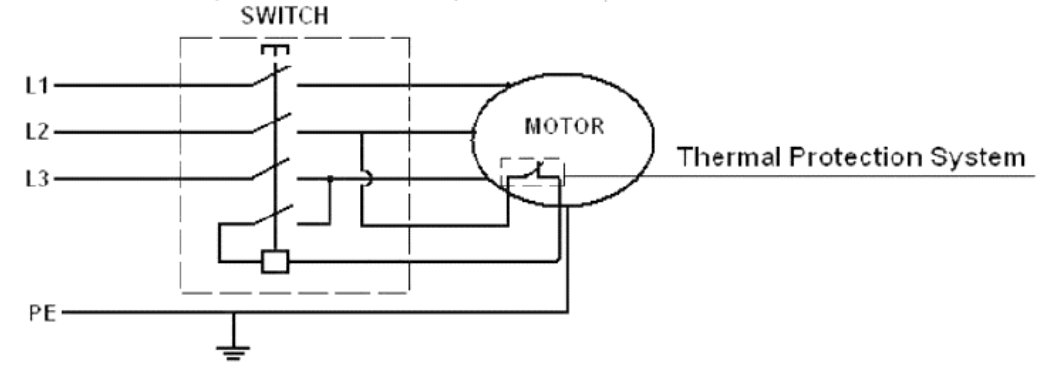

26 ERSATZTEILE / SPARE PARTS / PIEZAS DE REPUESTO

26.1 Ersatzteilbestellung / Spare parts order / pedido de piezas de repuesto

(DE) Mit HOLZMANN-Ersatzteilen verwenden Sie Ersatzteile, die ideal aufeinander abgestimmt sind. Die optimale Passgenauigkeit der Teile verkürzen die Einbauzeiten und erhöhen die Lebensdauer.

HINWEIS

Der Einbau von anderen als Originalersatzteilen führt zum Verlust der Garantie! Daher gilt: Beim Tausch von Komponenten/Teile nur vom Hersteller empfohlene Ersatzteile verwenden.

Bestellen Sie die Ersatzteile direkt auf unserer Homepage–Kategorie ERSATZTEILE.

oder kontaktieren Sie unseren Kundendienst

- über unsere Homepage–Kategorie SERVICE–ERSATZTEILANFORDERUNG,
- per Mail an service@holzmann-maschinen.at.

Geben Sie stets Maschinentype, Ersatzteilnummer sowie Bezeichnung an. Um Missverständnissen vorzubeugen, empfehlen wir, mit der Ersatzteilbestellung eine Kopie der Ersatzteilzeichnung beizulegen, auf der die benötigten Ersatzteile eindeutig markiert sind, falls Sie nicht über den Online-Ersatzteilkatalog anfragen.

(EN) With original HOLZMANN spare parts you use parts that are attuned to each other shorten the installation time and elongate your products lifespan.

NOTE

The installation of parts other than original spare parts leads to the loss of the guarantee!
Therefore: When replacing components/parts, only use spare parts recommended by the manufacturer.

Order the spare parts directly on our homepage–category SPARE PARTS or contact our customer service

- via our Homepage–category SERVICE–SPARE PARTS REQUEST,
- by e-mail to service@holzmann-maschinen.at.

Always state the machine type, spare part number and designation. To prevent misunderstandings, we recommend that you add a copy of the spare parts drawing with the spare parts order, on which the required spare parts are clearly marked, especially when not using the online-spare-part catalogue.

(ES) Con las piezas de recambio de Holzmann, utiliza piezas de recambio que se ajustan perfectamente entre sí. El ajuste óptimo de los componentes acorta el tiempo de instalación y aumenta la vida útil.

AVISO

¡La instalación de piezas de recambio no originales lleva a la pérdida de garantía! Por lo tanto: Al llevar a cabo la sustitución de componentes/piezas, utilice únicamente piezas de recambio recomendadas por el fabricante.

Pida las piezas de recambio directamente en nuestra página web: Categoría PIEZAS DE RECAMBIO,
o póngase en contacto con nuestro servicio de atención al cliente

- en nuestra página web, en la categoría SERVICIO–PEDIDO DE PIEZAS DE RECAMBIO,
- por correo electrónico a service@holzmann-maschinen.at.

Indique siempre el tipo de máquina, la referencia de la pieza de recambio y la denominación. Para evitar malentendidos, se recomienda adjuntar al pedido una copia del esquema de piezas de recambio en el que se marque claramente las piezas de recambio necesarias, cuando no se solicitan con el catálogo en línea de piezas de recambio.

26.2 Explosionszeichnung / Exploded view / vista en despiece ordenado

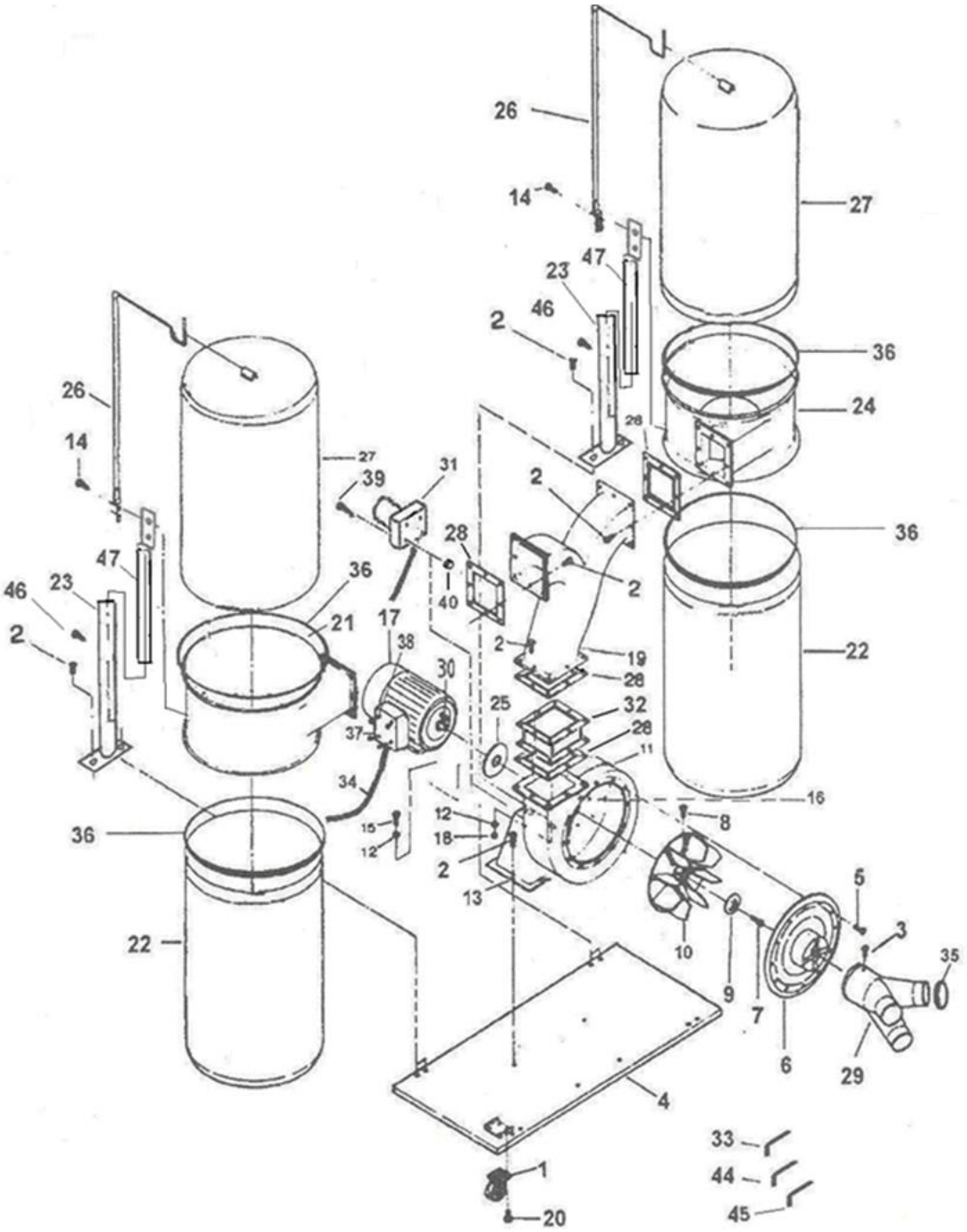

26.3 Ersatzteilliste / Spare part list / Listado de piezas de recambio

No.	Description	No.	Description	No.	Description
1	Caster	16	Bolt	31	Switch
2	Screw	17	Motor	32	Square tube
3	Screw	18	Nut	33	Wrench hex
4	Base plate	19	Connector	34	Cable
5	Screw	20	Screw	35	Cap
6	Inlet	21	Left-Collector	36	Bag clamp
7	Screw	22	Collector bag	37	Switch box
8	Screw hex	23	Collector support A	38	Head screw
9	Washer	24	Right-Collector	39	Screw
10	Turbo fan	25	Washer	40	Nut
11	Collector	26	Upper Bag Support	44	Wrench hex
12	Washer	27	Filter bag	45	Wrench hex
13	Motor Base	28	Packing	46	Screw
14	Screw hex	29	Inlet	47	Collector support B
15	Screw hex	30	Key		

27 ZUBEHÖR / ACCESSORIES

(DE) Optionales Zubehör finden Sie online auf der Produktseite, Kategorie EMPFOHLENES ZUBEHÖR ZUM PRODUKT.
(EN) Optional accessories can be found online on the product page, category RECOMMENDED PRODUCT ACCESSORIES.
(ES) Los accesorios opcionales se encuentran en la página del producto en internet, en la categoría ACCESORIOS RECOMENDADOS PARA EL PRODUCTO.